DE1_Appendix VIII

MICROGRIDS

Large Scale Integration of Micro-Generation
To Low Voltage Grids

WORK PACKAGE E

Report for Task TE3

MICROGRID GROUNDING SYSTEM ANALYSIS

DRAFT Issue No 1

1st October 2004

Nilanga Jayawarna
Nick Jenkins

UMIST

TABLE OF CONTENTS

1.0 INTRODUCTION **3**

2.0 SAFETY IN GROUNDING [1] **4**

2.1 TOLERABLE BODY CURRENT LIMIT 5
2.2 GROUND RESISTANCE OF FEET 6
2.3 GROUND POTENTIAL RISE (GPR) 7
2.4 TOUCH VOLTAGE 7
2.5 STEP VOLTAGE 10

3.0 SAFETY CRITERION **12**

4.0 SIMULATION STUDY **13**

5.0 THE SUBSTATION GROUNDING SYSTEM DESIGN **14**

5.1 SOIL MODEL 14
5.2 INITIAL DESIGN OF THE GROUNDING SYSTEM 15
5.3 FAULT CURRENT CALCULATION 16
5.4 PERFORMANCE ANALYSIS OF THE INITIAL DESIGN 17
5.4.1 Safe limits for step and touch voltages *17*
5.4.2 Observation profile *19*
5.4.3 Step and touch voltage of the initial design *20*
5.4.4 Ground impedance of the initial design *22*
5.5 MODIFYING THE INITIAL DESIGN 22
5.5.1 Modified Ground System A *23*
5.5.2 Modified Ground System B *24*
5.6 FINAL GROUND SYSTEM DESIGN 25

6.0 PERFORMANCE EVALUATION OF MICROGRID GROUND SYSTEM **26**

6.1 TOUCH VOLTAGES IN THE MICROGRID 26
6.2 STEP VOLTAGES IN THE MICROGRID 28

7.0 CONCLUSIONS **29**

8.0 REFERENCES **30**

APPENDIX A: CALCULATION OF BODY CURRENTS RESULTING FROM ELECTRIC SHOCKS **31**

APPENDIX B: EFFECTS OF A THIN LAYER OF SURFACE MATERIAL [1] **38**

1.0 Introduction

The MicroGrid is a unique distribution system and as such needs careful assessment in all of its design aspects. A MicroGrid will be subject to the same safety requirements as any other utility electric power system. Analysis of grounding system performance would be a vital safety requirement.

One of the main concerns when designing a grounding system is to ensure that no electrical hazards exist outside or within the substation during normal and fault conditions. Potential gradients will be produced within and around a substation due to the flow of current into the earth during ground fault conditions. During steady state normal conditions, no current or a very small residual current flows in the neutral and grounding system. This residual current is usually less than 10% of the nominal load current and poses no threat to the safety of the system. Therefore safety is usually a concern only during phase to ground faults.

A safe grounding design has two main objectives

1. To provide a path for electric currents in to the earth under normal and fault conditions
2. To ensure the safety of a person in the locality

The primary objectives of this grounding analysis were to propose an earthing system for a typical MicroGrid and to evaluate the safety and adequacy of the proposed design. The safety criterions used were touch voltage, step voltage and ground potential rise.

ANSI/IEEE Standard 80-2000 [1] provides a methodology of determining maximum acceptable values for touch voltage and step voltage. The actual step and touch voltages in and around the substation (for prospective earth fault currents) were evaluated in order to ensure that they are within safe limits.

2.0 Safety in grounding [1]

Safety in grounding is achieved by controlling the interaction of the two grounding systems, 1) the intentional ground, consisting of ground electrodes buried below earth surface and 2) accidental ground, which is temporary and caused by a person exposed to a potential gradient in the locality of a grounded facility. The safety of a person depends on preventing the critical amount of shock energy from being absorbed before the fault is cleared and the system de-energised.

Effects of an electric current passing through the vital parts of a human body depend on the duration, magnitude and frequency of this current. The most common physiological effects in order of severity are threshold of perception, muscular contraction, unconsciousness, fibrillation of the heart, respiratory nerve blockage and burning.

If shock currents can be kept below the fibrillation threshold, injury or death may be avoided. Non-fibrillating current is related to the energy absorbed by the body according to the following formula (for durations ranging from 0.03 – 3.0 seconds).

$$S_B = (I_B)^2 \times t_s \qquad \text{Equation (1)}$$

Where

S_B = Empirical constant related to the electric shock energy tolerated by a certain percentage of a given population

I_B = Current (rms) through the body (A)

t_s = Duration of the current exposure (s)

Electric shock accidents could occur under the following conditions:

1. High fault current to ground relative to the area of grounding system and its resistance
2. Soil resistivity and distribution of ground currents causing high potential gradients at the earth surface

3. A person bridging two points of high potential difference.
4. Absence of sufficient contact resistance or other series resistance to limit the current through the body
5. Duration of the fault and body contact

There are two advantages in high-speed clearance of ground faults.

i. Reduced probability of exposure to electric shock.
ii. Reduced chance of severe injury or death.

High ground gradients due to faults are rare and shocks resulting from high ground gradients are even more rare in reality. Further, such events are often of very short duration. Therefore it is not practical to design a ground system against shocks that are only painful and do not cause serious injury, i.e. for currents below the fibrillation threshold.

2.1 Tolerable body current limit

To ensure safety, the magnitude and duration of the current conducted through a human body should be less than the value that can cause ventricular fibrillation of the heart. It is assumed that 99.5% of the population can safely endure a current with magnitude and duration determined by Equation (2), without causing ventricular fibrillation.

$$I_B = \frac{k}{\sqrt{t_s}} \qquad \text{Equation (2)}$$

Where

$k = \sqrt{S_B}$ From (1)

Fibrillation current is assumed to be a function of individual body weight. Shock energy that can be survived by 99.5% of persons weighing approximately 50 kg is $(S_B)_{50kg} = 0.0135$. Therefore $k_{50} = 0.116$.

Hence the tolerable body current limit for 50kg body weight is

$$(I_B)_{50kg} = \frac{0.116}{\sqrt{t_s}} \qquad \text{Equation (3)}$$

For persons weighing approximately 70kg, $(S_B)_{70kg} = 0.0246$ and $k_{70} = 0.157$

$$(I_B)_{70kg} = \frac{0.157}{\sqrt{t_s}} \qquad \text{Equation (4)}$$

It has to be kept in mind that the above equations (3) & (4) are based on tests limited to a range of time between 0.03- 3.0 seconds and are not applicable for very short or long durations.

2.2 Ground resistance of feet

The human foot can be represented as a conducting metallic disc when calculating its ground resistance while the contact resistance of shoes, socks, etc. is neglected.

The ground resistance of a metallic disc of radius b (m) on the surface of a homogeneous earth of resistivity ρ (Ω. m) is given by

$$R_f = \frac{\rho}{4b}$$

Usually, a circular plate with a radius of 0.08 m is used to represent the foot. Thus, the ground resistance of one foot (with presence of the substation grounding system ignored) is

$$R_f = \frac{\rho}{0.32} \qquad \text{Equation (5)}$$

The internal resistance of the human body is approximately equal to 300 Ω. However the body resistance including the skin could range from 500 – 3000 Ω. The resistance of a human body, R_B, is taken as 1000 Ω for this study. This resistance could be from hand-to-feet, hand-to-hand or from one foot to the other foot.

2.3 Ground Potential Rise (GPR)

GPR is defined as "*the maximum electrical potential that a substation grounding-grid may attain relative to a distant grounding point assumed to be at the potential of remote earth. This voltage, GPR is equal to the maximum grid current times the grid resistance*" [1].

GPR differences can occur between remote parts of the grounding grid as a result of circulating currents in the substation grounding system. Significant potential differences between distant parts of the grounding system can give rise to local touch voltages or equipment stress voltages when low voltage insulated conductors connect equipment at two such locations [2]. Appropriate protection must be in place at such locations, rated for the GPR differentials that can arise. It is necessary to identify such locations.

The above issues related to GPR differences would be particularly true for grounding systems extending over a large area. However this study is based on a simple grounding system covering a small substation area. Thus GPR differences would not be a safety concern in this case.

2.4 Touch voltage

An accidental ground circuit is established when a person is exposed to a potential gradient in the vicinity of a grounded facility. The tolerable body current, I_B, defined by Equation (3) or (4), is used to define the tolerable total effective voltage of the accidental circuit (touch or step voltage).

ANSI/IEEE Standard 80-2000 defines the touch voltage as "*the potential difference between the GPR and the surface potential at the point where a person is standing while at the same time having a hand in contact with a grounded structure*".

Figure 1 shows an accidental circuit where a person is exposed to a touch voltage. The fault current, I_f, is discharged to the ground by the substation grounding system and the human body. This person is touching a grounded metallic structure at Point H, which is at the same potential as the station grid. F is the small area on the surface of the earth that is in contact with the person's two feet. The current, I_b, flows through the body of the person to the ground.

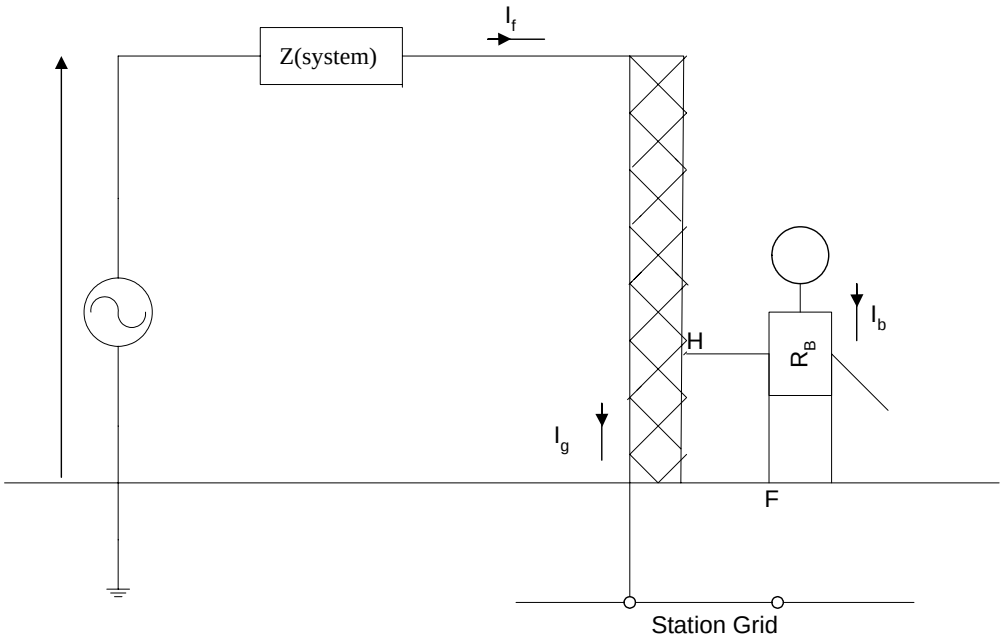

Figure 1: Exposure to touch voltage [1]

Using the Thevenin theorem, we can represent the above network by the circuit in Figure 2. The Thevenin voltage V_{TH} is the voltage between terminals H and F when the person is not present. The Thevenin impedance Z_{TH} is the impedance of the system as seen from points H and F with voltage sources of the system short-circuited. R_B is the resistance of the human body.

A conservative value for the Thevenin impedance of this circuit is given by $Z_{TH} = \frac{R_f}{2}$. Appendix A presents details of how this value was derived.

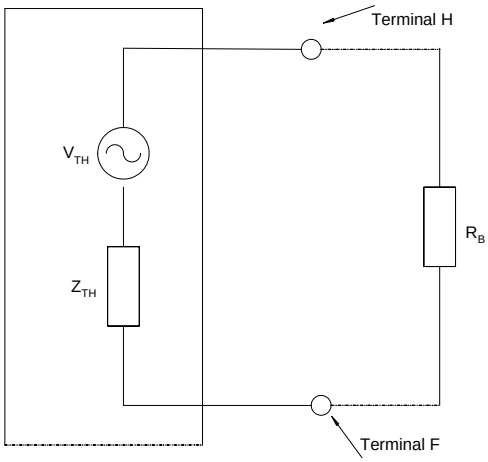

Figure 2: Touch voltage circuit [1]

Hence, the Thevenin impedance for touch voltage accidental circuit with uniform soil resistivity,

$$Z_{TH} = \frac{R_f}{2} \Rightarrow Z_{TH} = 1.5 * \rho \qquad \text{From Equation (5)}$$

The current through the body of the person, I_b, is given by

$$I_b = \frac{V_{TH}}{Z_{TH} + R_B} \qquad \text{Equation (6)}$$

The tolerable touch voltage in V

$$E_{touch} = I_B \times (R_B + 1.5\rho) \qquad \text{Equation (7)}$$

For body weight of 50kg, from (3) and for $R_B = 1000\Omega$

$$E_{touch,50} = (1000 + 1.5\rho) * \frac{0.116}{\sqrt{t_s}} \qquad \text{Equation (8)}$$

For body weight of 70kg, from (4) and for $R_B = 1000\Omega$

$$E_{touch,70} = (1000 + 1.5\rho) * \frac{0.157}{\sqrt{t_s}} \qquad \text{Equation (9)}$$

2.5 Step voltage

Step Voltage is defined as "*the difference in surface potential experienced by a person bridging a distance of 1m with the feet without contacting any grounded object*" [1].

Figure 3 shows an incident where a person is exposed to a step voltage. F1 and F2 are the areas on the surface of the earth that are in contact with the two feet. The fault current, I_f, is discharged to the ground by the substation grounding system. The current, I_b, flows from one foot F1 through the body of the person to the other foot F2.

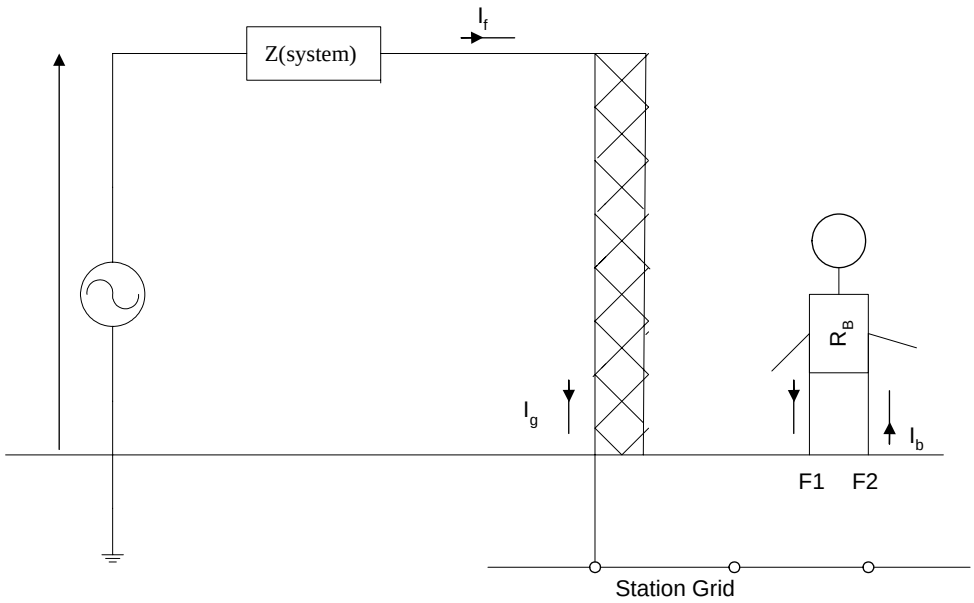

Figure 3: Exposure to step voltage [1]

Using the Thevenin theorem, we can represent the above network by the circuit in Figure 4. The Thevenin voltage V_{TH} is the voltage between terminals F1 and F2 when the person is not present. The Thevenin impedance Z_{TH} is the impedance of the system as seen from points F1 and F2 with voltage sources of the system short-circuited. R_B is the resistance of the human body.

The current through the body of the person, I_b, is given by Equation (6) in touch voltage section.

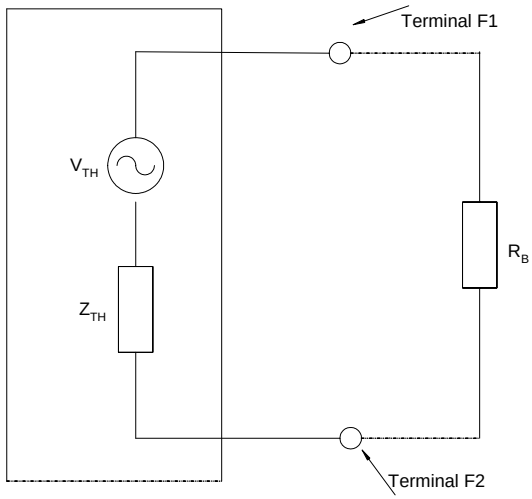

Figure 4: Step voltage circuit [1]

For step voltage accidental circuit, with uniform soil resistivity

$$Z_{TH} = 2 * R_f \Rightarrow Z_{TH} = 6 * \rho \qquad \text{From Equation (5)}$$

The tolerable step voltage in V

$$E_{step} = I_B \times (R_B + 6\rho) \qquad \text{Equation (10)}$$

For body weight of 50kg, from (3) and for $R_B = 1000\Omega$

$$E_{step,50} = (1000 + 6\rho) * \frac{0.116}{\sqrt{t_s}} \qquad \text{Equation (11)}$$

For body weight of 70kg, from (4) and for $R_B = 1000\Omega$

$$E_{step,70} = (1000 + 6\rho) * \frac{0.157}{\sqrt{t_s}} \qquad \text{Equation (12)}$$

3.0 Safety Criterion

MicroGrid ground system safety analysis is based on the step and touch voltage criterion. The maximum driving voltage of any accidental circuit (step or touch voltage) should not exceed the limits defined in the above sections (Equation 8, 9, 11 and 12).

It has to be noted that the above equations have been derived on the assumption of uniform soil resistivity. However a 3-6 inch layer of high resistivity material such as gravel is often spread on the earth surface above the ground grid. This is carried out to increase the contact resistance between the soil and the feet of persons in the substation vicinity. In turn, the current through the body of a person is lowered considerably.

The expression for the ground resistance of the foot on a thin layer of surface material is different from Equation (5), which was derived for a homogeneous soil. This study was based on the assumption of uniform soil resistivity in the substation ground. Therefore the effects of a layer of surface material were not included in the safety analysis. However, these effects and the resulting equations are presented in ‘Appendix B’.

The maximum allowable voltage limits have to be calculated and then the touch and step voltages in and around the substation need to be examined. The safety of the substation ground is determined by ensuring that the step and touch voltages do not exceed the above-mentioned safe limits.

4.0 Simulation study

This study was based on the simplified MicroGrid model of the study case network proposed by NTUA, which is shown in Figure 5. The 20/0.4 kV distribution transformer secondary is earthed and this earth resistance is equal to 3 Ω.

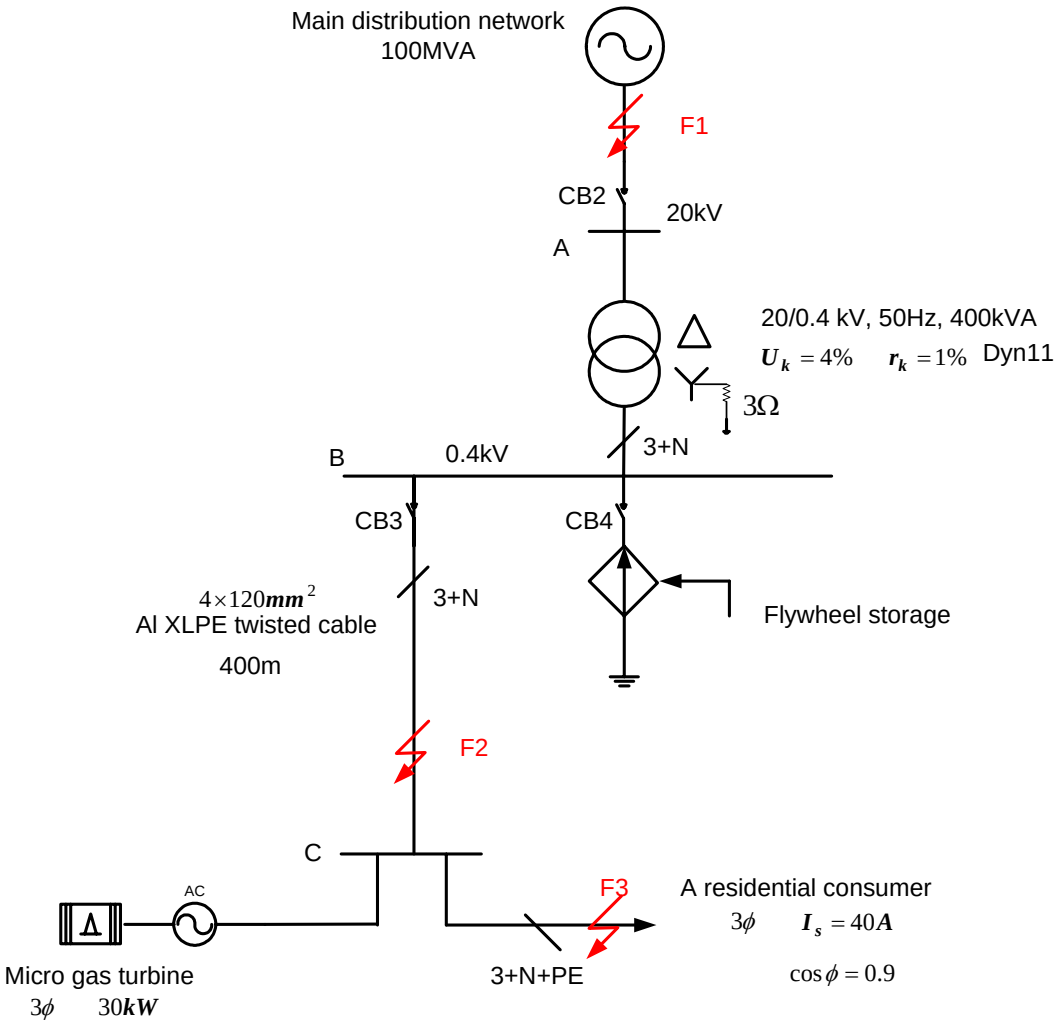

Figure 5: A simple MicroGrid model derived from NTUA study case network

The earthing system to be used in the MicroGrid had been proposed as TN-C-S or TT [3]. The fault current distribution in the MicroGrid for a phase to ground fault had been determined [4]. The electrical protection schemes for the MicroGrid had been defined and the highest fault clearing time is 0.7 seconds [5]. The system frequency is 50 Hz and the system X/R ratio is taken as equal to unity. The soil resistivity is assumed to be uniform and is equal to 100 Ω. m.

The specialist grounding software, CDEGS, was used for the computer modelling. One of its subsystems, MALZ, was used as the simulation tool in this particular study. MALZ calculations are based on IEEE standard 80.

5.0 The substation grounding system design

A grounding system is installed to ensure the safety of people or equipment under normal or fault conditions. The system should also ensure continuity of service.

The grounding design analysis is normally carried out in six major steps [6]

1. An equivalent soil model to the real earth structure is determined.
2. A preliminary economical grounding system configuration is developed. Its performance is analysed based on an assumed fault current magnitude discharged by the grid.
3. The actual fault current discharged by the substation grounding system is determined.
4. The results are analysed to determine whether all the design requirements are met. In particular, the safe step and touch voltage thresholds are determined based on the applicable standards and regulations and those are compared with the computed actual voltages.
5. If all design requirements are not met the initial design is modified and design analysis is restarted at Step 2
6. If seasonal soil resistivity variations must be accounted for then the entire analysis is repeated for every realistic soil scenario and the worst-case scenario is used to develop the final design.

5.1 Soil model

A uniform soil model with a soil resistivity of 100 Ωm was assumed in this MicroGrid grounding system design.

5.2 Initial design of the grounding system

According to the step 2 of the design methodology, a preliminary system has to be configured. A grounding grid is a system of horizontal ground electrodes buried in the earth. A typical grid usually is supplemented by a number of vertical ground rods and may be further connected to auxiliary ground electrodes to lower its resistance with respect to remote earth. The common practice of most utilities is to use a combined system of vertical rods and horizontal conductors.

A system that combines a horizontal grid and a number of vertical ground rods penetrating lower soils was selected as the initial design. Such a design has the following advantages [1]

a) Horizontal conductors of a grid buried in a shallow depth (usually 0.3 – 0.5 m below earth surface) help to reduce high step and touch voltages on the earth's surface while sufficiently long ground rods help to stabilize the performance of such a combined system.
b) For a two-layer or multilayer soil with a higher earth resistivity in the upper soil layer, rods penetrating the lower resistivity soil are far more effective in dissipating fault currents.
c) If the rods are installed predominately along the grid perimeter, they will help to control the steep increase of the surface gradient near the peripheral meshes.

The initial design of the grounding system is as illustrated in Figure 6. This system consists of a 5m * 5m grid of four horizontal conductors along with four vertical ground rods at each corner of grid. Each vertical rod is 5m long and the grid is buried at 0.5 m depth.

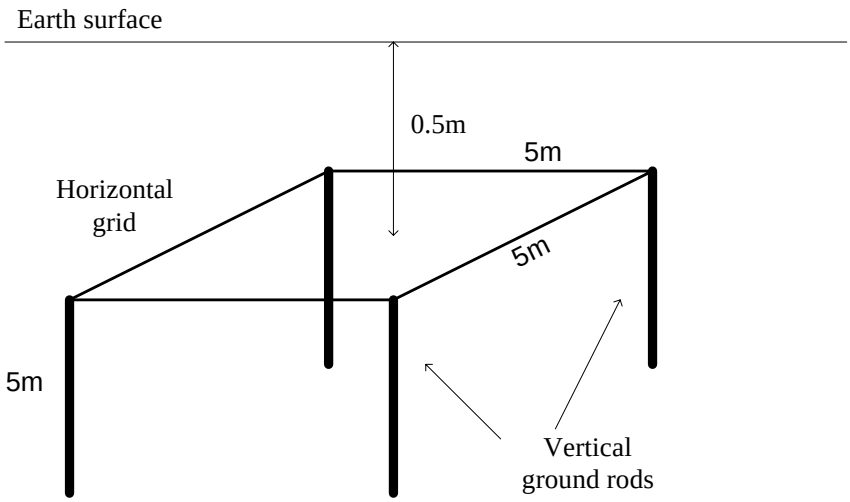

Figure 6: Preliminary design of the grounding system (not to scale)

5.3 Fault current calculation

The fault current distribution in the study case MicroGrid had been determined [4]. Therefore the Step 3 of the design had already been completed.

Faults had been applied at the main distribution network (F1), MicroGrid network (F2) and at a load end (F3) during grid connected operation and islanded operation. The currents injected to the earth due to the faults F2 and F3 only influence the performance of the substation ground system. Therefore only the earth currents due to F2 and F3 were considered. The fault current distribution in a MicroGrid for TN and TT systems are as given in Table 1.

Grid connected operation			
Fault type	Earthing system	Total Fault current (A)	Total earth current (A)
F2	TN	14,828	0
	TT	17.8	17.8
F3	TN	858	8.7
	TT	17.6	17.6

Islanded operation			
Fault type	Earthing system	Total Fault current (A)	Total earth current (A)
F2	TN	1462	0
	TT	17.5	17.5
F3	TN	558	5.7
	TT	17.4	17.4

Table 1: Fault current distribution in a MicroGrid [4]

According to the above table, the maximum possible earth fault current in a MicroGrid for a TT system or a TN system is in the order of 18 A. Therefore 20A was chosen as the earth fault current being discharged to the ground and this value was used to analyse the performance of the preliminary grounding design.

5.4 Performance analysis of the initial design

The aim in this step is to determine the ground grid performance including its ground impedance. In the analysis of the grounding system performance, step and touch voltages were used as the main safety requirements. First, the safe step and touch voltage thresholds need to be estimated.

5.4.1 Safe limits for step and touch voltages

The safety threshold values for step and touch voltages need to be calculated first. These parameters would vary in the presence of a layer of surface material on the earth above the grounding system. The safe step and touch voltage limits for different surface layer resistivities are given in Table 2 for three different fault clearing times (0.25s, 0.5s and 0.7s). This safety calculation table had been generated using MALZ, for a body weight of 50 kg.

Safety Calculations Table

```
System Frequency.............................(Hertz).:  50.000
System X/R...........................................:  1.0000
Surface Layer Thickness.....................(  in ).:  6.0000
Number of Surface Layer Resistivities...............:   10
Starting Surface Layer Resistivity..........(ohm-m).:   NONE
Incremental Surface Layer Resistivity.......(ohm-m).:  500.00
Equivalent Sub-Surface Layer Resistivity....(ohm-m).:  100.00

Body Resistance Calculation..........: IEEE 80
Fibrillation Current Calculation.....: IEEE 80 (50kg)
Foot Resistance Calculation..........: IEEE (Std.80)  Series Expansion Cs
   User Defined Extra Foot Resistance:   0.0000     ohms
```

Fault Clearing Time (sec)	0.250	0.500	0.700
Decrement Factor	1.006	1.000	1.000
Fibrillation Current (amps)	0.231	0.164	0.139
Body Resistance (ohms)	1000.00	1000.00	1000.00

SURFACE LAYER RESIST-IVITY (OHM-M)	FAULT CLEARING TIME 0.250 sec. STEP VOLTAGE (VOLTS)	0.250 sec. TOUCH VOLTAGE (VOLTS)	0.500 sec. STEP VOLTAGE (VOLTS)	0.500 sec. TOUCH VOLTAGE (VOLTS)	0.700 sec. STEP VOLTAGE (VOLTS)	0.700 sec. TOUCH VOLTAGE (VOLTS)	FOOT RESIST-ANCE: 1 FOOT (OHMS)
NONE	**374.6**	**266.6**	**266.6**	**189.7**	**225.3**	**160.3**	**312.5**
500.0	765.4	364.3	544.7	259.2	460.3	219.1	1160.1
1000.0	1237.7	482.3	880.8	343.2	744.4	290.1	2184.5
1500.0	1708.2	600.0	1215.5	426.9	1027.3	360.8	3204.8
2000.0	2178.1	717.4	1550.0	510.5	1310.0	431.5	4224.1
2500.0	2647.9	834.9	1884.2	594.1	1592.5	502.1	5242.9
3000.0	3117.5	952.3	2218.4	677.6	1874.9	572.7	6261.5
3500.0	3587.1	1069.7	2552.6	761.2	2157.3	643.3	7280.0
4000.0	4056.7	1187.1	2886.8	844.7	2439.8	713.9	8298.5
4500.0	4526.4	1304.5	3220.9	928.3	2722.2	784.5	9317.0

*** NOTE * Listed values account for short duration asymmetric waveform decrement factor listed at the top of each column.**

Table 2: Safety calculation Table generated by MALZ

According to the above table, the safe limits for touch and step voltages for a homogeneous soil (the case with no surface layer) are 266.6V and 374.6V respectively (for a fault clearing time of 0.25 seconds). The safe voltage limits are increased for higher surface layer resistivity and faster fault clearing times. The safety calculation table above demonstrates this fact clearly.

These same limits for a homogeneous soil could be determined using Equations (8) and (11), for a body weight of 50 kg and a fault clearing time of 0.25 seconds.

From (8), $E_{touch50,0.25s} = (1000 + 1.5 * 100) * \frac{0.116}{\sqrt{0.25}}$ = 266.8 V …(12)

From (11), $E_{step50,0.25s} = (1000 + 6 * 100) * \frac{0.116}{\sqrt{0.25}}$ = 371.2 V …(13)

However, the worst-case scenario was selected to determine the maximum step and touch voltage, i.e. where the fault clearing time is 0.7 seconds according to the proposed protection schemes for the MicroGrid [5]. Therefore 160.3 V and 225.3 V were taken as the safety thresholds for touch voltage and step voltage respectively.

5.4.2 Observation profile

In order to determine whether this design is safe, the actual step and touch voltages need to be compared against the above safety limits. The examination of touch voltages could be restricted to the substation. However the step voltages are of interest not just in the substation, but also in the immediate surrounding area of the substation. Therefore in order to examine the step and touch voltages in and around the substation, the observation points were defined to cover an area extending 2m outside the substation. A profile containing observation points spaced 1m apart at the surface of the earth above the grounding system was defined and this profile was replicated every 1m along the grid. Thus eight profiles (P1- P8) were created for the analysis. These profiles are shown in Figure 7.

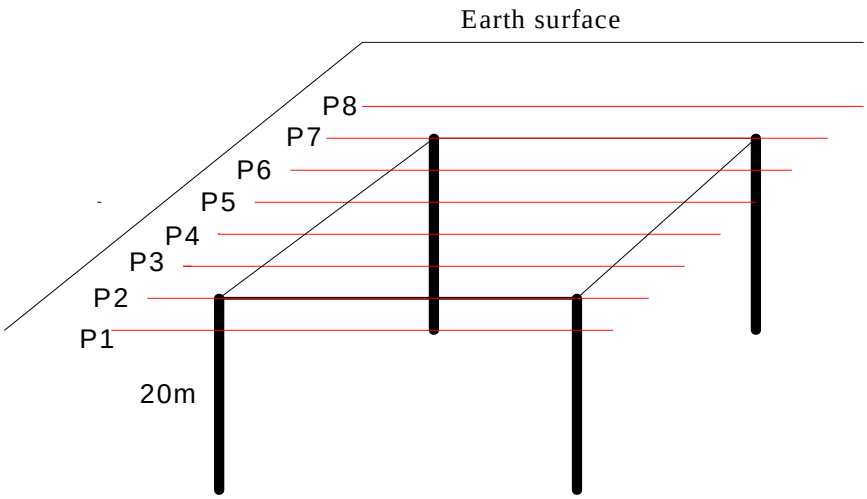

Figure 7: Observation profiles (not to scale)

5.4.3 Step and touch voltage of the initial design

The touch voltages are shown in Figure 4.8 while the step voltages are shown in Figure 4.9. Only the 2D views of the results are shown for this initial analysis. Profiles 1 and 8 are outside the substation ground area. Profiles 2 - 7 consist of the observation points that fall within the substation ground area. In the profiles 2 –7, within 2m – 7m distance from the origin, lays the substation ground system area. All the other points lie outside of the substation and have been included for further analysis of the immediate area surrounding the substation.

It could be seen that the following profiles are coincident with each other due to the symmetry of the ground design.

Profile 1 with Profile 8

Profile 2 with Profile 7

Profile 3 with Profile 6

Profile 4 with Profile 5

As could be observed from these two graphs, the maximum touch voltage is less than 33 V and the maximum step voltage is approximately 21 V within the substation area. These actual values are well below the previously calculated safety limits (touch voltage limit =160.3 V and step voltage limit = 225.3 V). Therefore this grounding system satisfies the safety criterion.

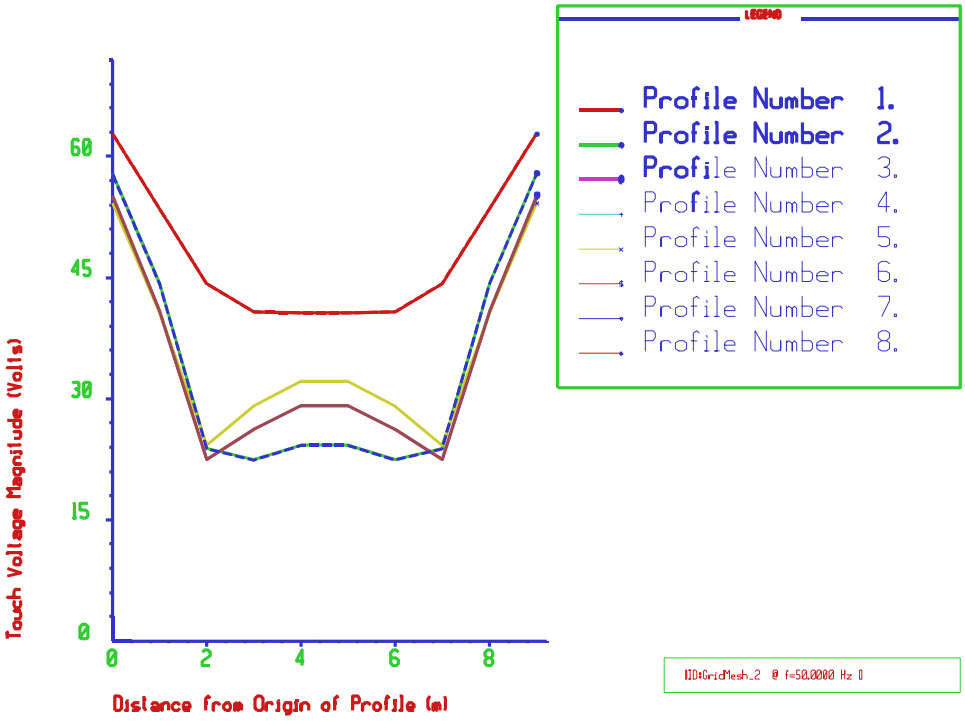

Figure 8: Touch voltages for the initial design

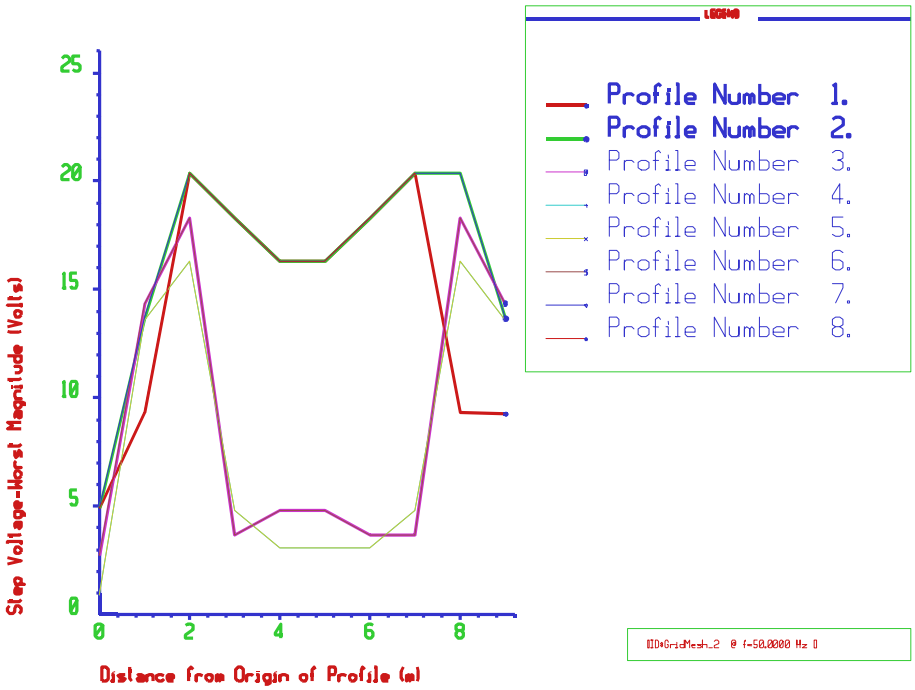

Figure 9: Step voltages for the initial design

5.4.4 Ground impedance of the initial design

The ground impedance is calculated next.

The Ground Potential Rise (GPR)	= 118.27 V
Injected current	= 20 A
Ground impedance	= 118.27 / 20
	= 5.9 Ω.

The desired substation ground impedance according to the proposed study case network is 3Ω. Therefore this initial design needs to be modified in order to derive a system of 3 ohms ground impedance.

5.5 Modifying the initial design

Some of the parameters affecting the performance of the grounding system are given below.

a. Soil resistivity parameters

Whether the soil is homogeneous or multi layered affects the behaviour of the grounding system. However a homogeneous soil model had been assumed for this study. Therefore the rest of the parameters affecting the grounding system performance are discussed under the assumption of uniform soil resistivity.

b. Grid conductor spacing and arrangement

A larger proportion of the current is discharged from the outer grid conductors than ones at or near the centre of the grid. This is true for ground rods too. Current density is greater in the rods near the periphery of the grounding system than for those in the centre. Thus touch voltage and step voltages are higher near the outer ground rods.

Current density can be made more uniform by employing non-uniform conductor spacing, with conductor spacing larger at the centre of the grid and smaller towards the perimeter.

c. Number of meshes in a grid or number of ground rods

For a given area to be grounded, increasing the number of meshes decreases the resistance of the grid. However this decrease in resistance quickly becomes negligible for large number of meshes. Increasing the number of ground rods reduces the resistance until the grounded area is saturated.

In addition to the lower resistance and lower GPR, the spacing between the horizontal conductors or rods is reduced. Thus earth surface potential is made more uniform and step and touch voltages are reduced too.

d. Grid burial depth or top-of-the-rod depth

Grid resistance shows a gradual decrease with burial depth until it approaches one half of its resistance value at the surface as the depth increases to infinity. But for typical variations of burial depths (approximately 0.5m –1.5m), this change in resistance with depth is negligible for uniform soil.

e. Length of rods

Increasing the length of the rods is effective in reducing the resistance of the system.

After considering the above factors, two modified designs are proposed for further consideration. The proposed modifications were based on the sole design requirement of reducing the resistance of the initial system to 3 Ω. As the earlier design with higher ground resistance satisfied the safety criterion, no further safety evaluation is really required as a system with lower resistance would yield lower step and touch voltages.

5.5.1 Modified Ground System A

The number of ground rods and their length is increased. The grid area remains constant at 5m * 5m with four horizontal conductors. Twenty rods are installed along the perimeter of the grid with a spacing of 1m. The length of the rods is 20m. Grid burial depth is 0.5 m. This system is shown in Figure 10.

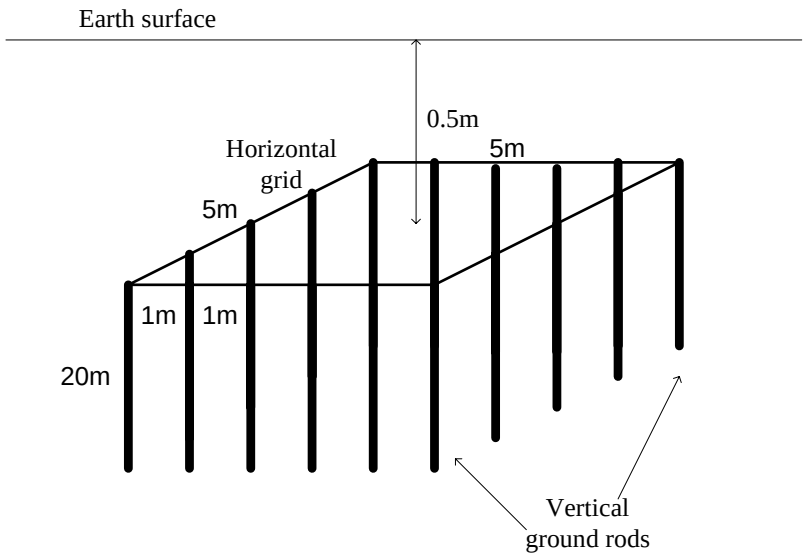

Figure 10: Modified ground system A (not to scale)

Calculating the ground impedance of the system

The Ground Potential Rise (GPR)	= 58.89 V
Injected current	= 20 A
Ground impedance	= 58.89 / 20
	= 2.95 Ω.

The total length of conductors in the system = 220 m

5.5.2 Modified Ground System B

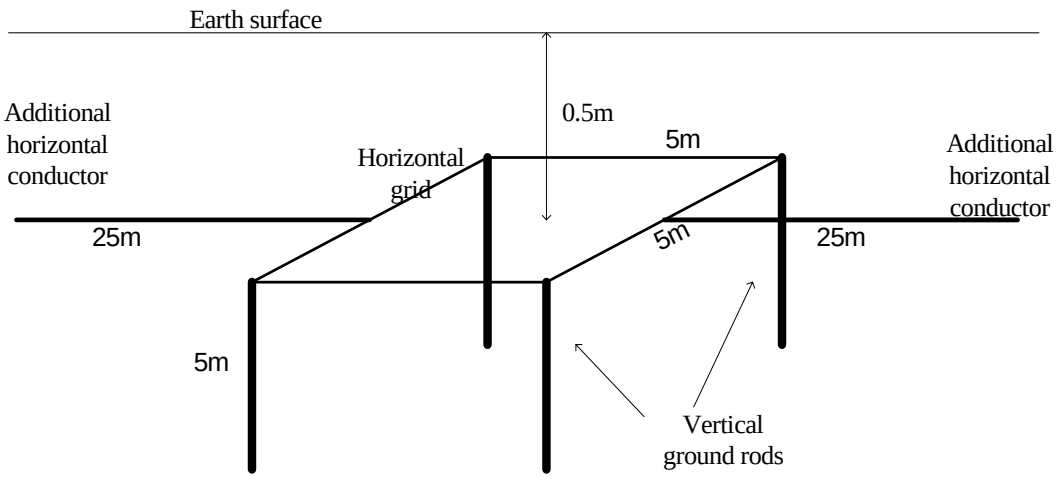

Figure 11: Modified ground system B (not to scale)

The initial design is kept the same, i.e. a 5m * 5m grid buried at 0.5 m depth with four 5m long ground rods at the corners. Two horizontal conductors are added to the system as a means of increasing the ground system area because the ground impedance is mainly dependent on the area covered by the grounding grid and is relatively insensitive to the conductor density of the ground. Each of these conductors is 25 m long. This system is illustrated in Figure 11.

Calculating the ground impedance of the system

The Ground Potential Rise (GPR)	= 59.83 V
Injected current	= 20 A
Ground impedance	= 59.83 / 20
	= 2.99 Ω.

The total length of conductors in the system = 90 m

5.6 Final ground system design

Both the above designs (A and B) have a ground resistance approximately equal to 3Ω, satisfying the design requirement. However, the ‘design B’ is superior to ‘design A’ when practicality and cost of implementation are considered. Ground rods in ‘design A’ are 20m long and that would not be acceptable at a 20/0.4 kV substation ground. The two additional horizontal conductors in ‘design B’ could be laid along the cable trenches, which are already in place. Thus ‘design B’ would not incur too many extra costs when applying the design. Therefore the modified design B was selected as the finalised ground system.

6.0 Performance evaluation of MicroGrid ground system

Now that the ground system is finalised, the safety and the adequacy of the proposed design need to be evaluated. The safety objectives were identified along with the safety criterion previously. The GPR of the system for an injected fault current of 20A is 59.83 V.

Actual step and touch voltages in and around the substation have to be computed. Figures 12 – 15 show the computed step and touch voltages for profiles 1 to 8, which were discussed in section 5.4.2 (Refer to figure 7). These profiles were taken inside and 2m outside the substation. Profiles 2 - 7 consist of the observation points that fall within the substation ground area. In the profiles 2 –7, within 2m – 7m distance from the origin, lays the substation ground system area. All the other points lie outside of the substation and have been included for further analysis of immediate area surrounding the substation.

6.1 Touch Voltages in the MicroGrid

Figure 12 shows the two-dimensional view of the touch voltages. Although the observation points had been defined to cover an area larger than the area covered by the substation (mainly to examine the step voltages), the voltages in the substation are the only safety concern with respect to touch voltage. The coincidence of the following profiles with each other can be observed again. Profile 1 coincides with 8, 2 with 7, 3 with 6 and 4 with 5. This equivalence of profiles is due to the symmetry of the grid design.

From figure 12, it is clear that the maximum touch voltage within the substation occur towards its centre and is approximately 11 V. This is well below the maximum acceptable touch voltage of 160.3 V. The touch voltages range from 3 V to 11 V within the substation and show a considerable increase outside of it.

Figure 13 presents the touch voltages over the same area as a 2D spot colour view. The grid configuration is also superposed on for more clarity. It is evident that the touch voltages within the substation area do not exceed 40% of the maximum value of 21. 72 V, which occur at 2m outside the substation perimeter.

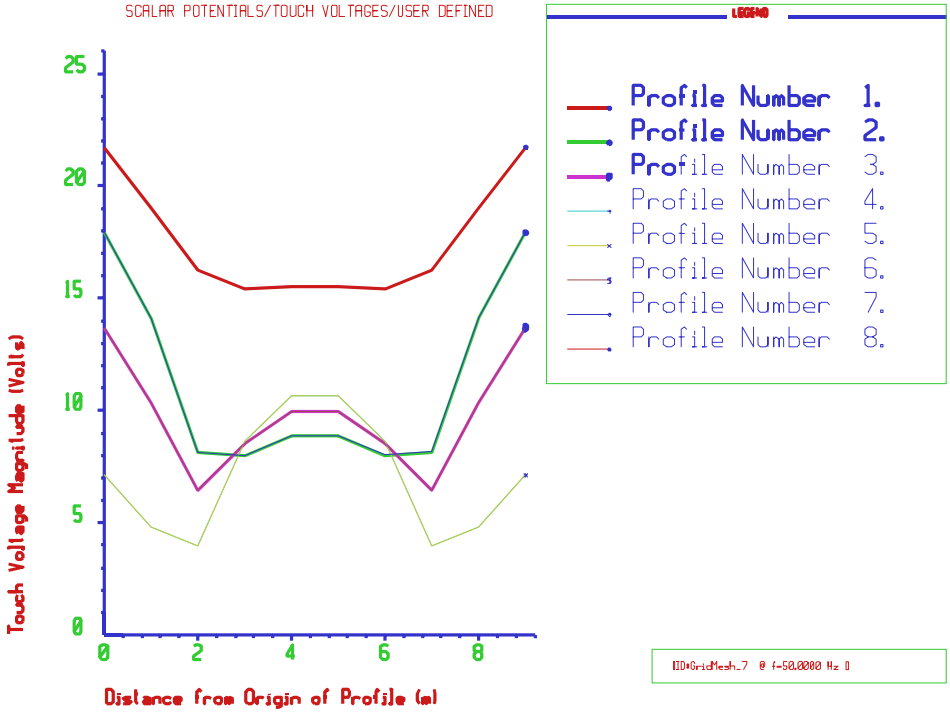

Figure 12: Touch voltages of the final design – 2D view

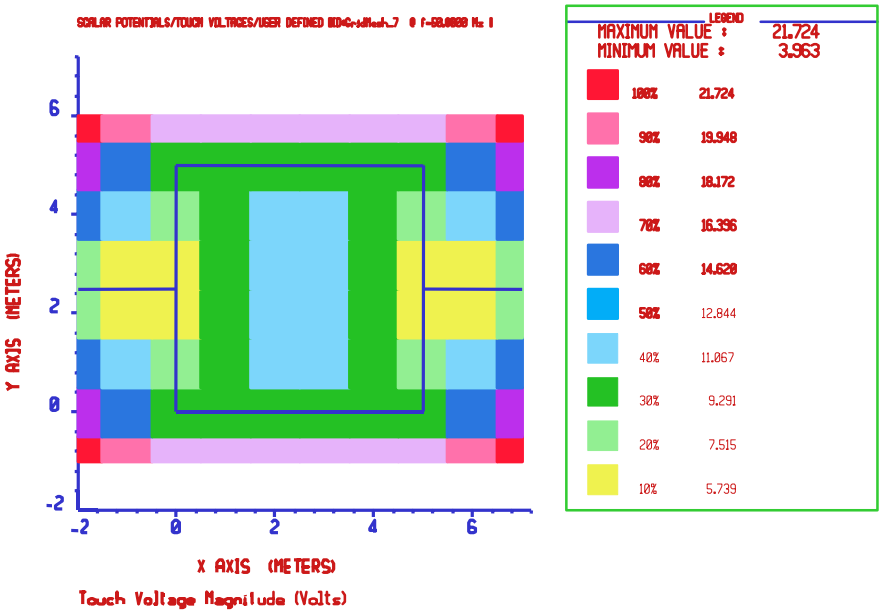

Figure 13: Touch voltages of the final design – spot view

6.2 Step Voltages in the MicroGrid

Within a substation and within 1m outside the perimeter fence, step voltages are lower than touch voltages. Furthermore, the safety limits for step voltages are higher than for touch voltages. Consequently, satisfying the touch voltage safety criteria for the substation automatically ensures satisfaction of the step voltage safety criteria. However step voltages also have been calculated and are shown in Figures 14 and 15.

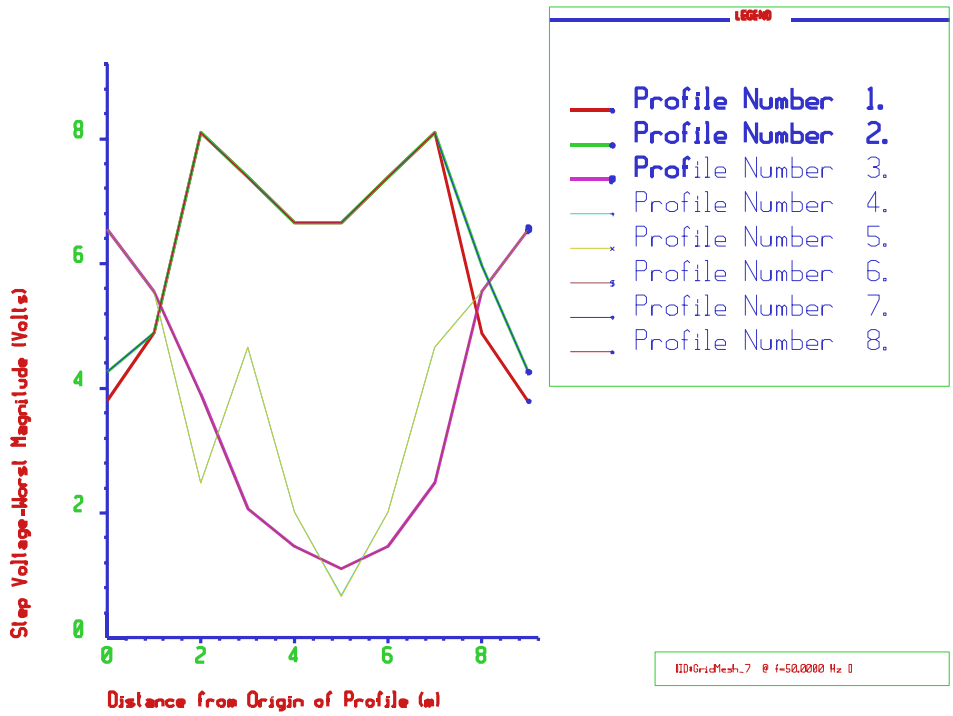

Figure 14: Step voltages of the final design – 2D view

Figure 14 and 15 show that the maximum step voltage is approximately 8 V and this voltage occurs at the corners of the grid. The maximum acceptable step voltage is 225 V for the worst-case scenario of 0.7 seconds fault clearing time. It is obvious that there are no safety concerns regarding step voltages in and around this substation at all.

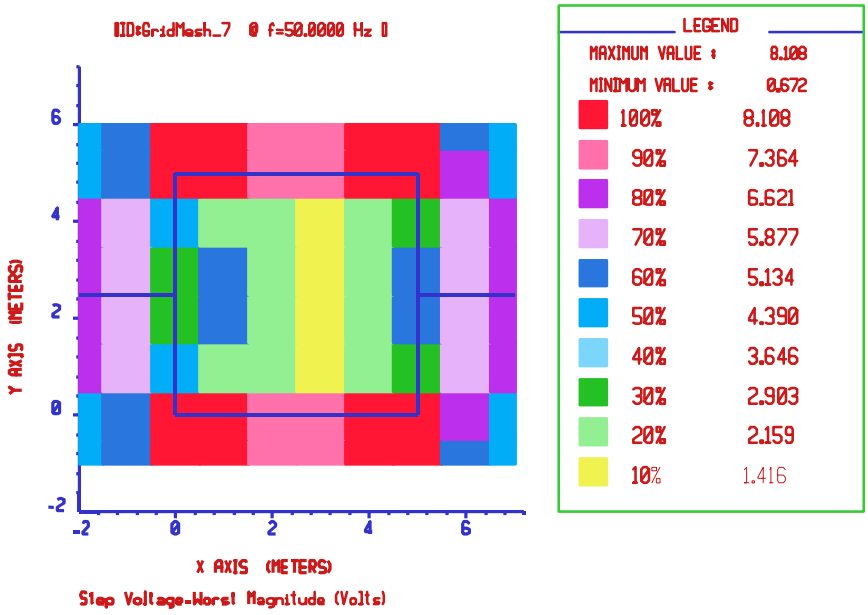

Figure 15: Step voltages of the final design – spot view

7.0 Conclusions

A grounding system design for the MicroGrid has been proposed. Its adequacy during fault conditions was studied from an electrical safety point of view. The safety criterion used was the touch voltage and the step voltage.

Step and touch voltages were calculated for several profiles covering the area within and around the substation. The worst-case fault conditions were assumed and the maximum touch voltage within the substation was approximately 11 V, while the maximum step voltage was around 8 V at the corners of the grid. The touch and step voltages are considerably higher outside the substation, but still well below the maximum allowable voltages. The safety limits for touch and step voltages are 160.3 V and 225.3 V respectively. Therefore the proposed ground system complies with the safety requirements.

8.0 References

1. IEEE Standard 80-2000 (Revision of IEEE Standard 80 – 1986), “IEEE Guide for Safety in AC Substation Grounding”, 2000

2. “Large Suburban Substation Grounding System Analysis: Measurements and Computer Modelling”, Version 8, January 2000, Safe Engineering Services & technologies Ltd., Montreal, Canada

3. Jayawarna, N., Lorentzou, M., Papathanassiou, S., “Review of Earthing in a MicroGrid”, MicroGrids project internal report, April 2004

4. Jayawarna, N., “Fault current Distribution in a MicroGrid”, MicroGrids project internal report September 2004

5. Xueguang, W., Jayawarna, N., Jenkins, N., “Electrical Protection Schemes for the MicroGrid”, MicroGrids project internal report, July 2004

6. “A Simple Substation Grounding Analysis”, Version 8, January 2000, Safe Engineering Services & technologies Ltd., Montreal, Canada

Appendix A: Calculation of body currents resulting from electric shocks

ANSI/IEEE Standard 80 presents the commonly accepted method for calculating the currents through a human body during an electric shock. However there are a few discrepancies in the calculation methods in subsequent versions of the standard 80. This is an attempt to clarify these issues in a single document. The relevant vital points in ANSI/IEEE Standard 80 – 1986, ANSI/IEEE Standard 80 – 2000 and a paper by F P Dawalibi and colleagues are presented.

The following assumptions are applicable for calculations in all the above documents.

1. Hand and shoe contact resistances are equal to zero
2. Human body resistance, R_B, is equal to 1000 ohms (representing the resistance from hand-to-both feet, hand-to-hand or from one foot to the other foot).

1. ANSI/ IEEE Std 80 – 1986

The following notation applies for an accidental circuit equivalent

I_A = Current through the accidental circuit

R_A = Total effective resistance of the accidental circuit

I_B = Permissible body current

For safety purposes, always $I_A < I_B$. The total effective resistance, R_A is a function of the body resistance, R_B, and the footing resistance, R_F. The footing resistance, R_F, is defined in this version of IEEE std 80 as the resistance of the ground just beneath the feet.

The self and mutual resistances of the feet on the surface of a homogeneous earth of resistivity, ρ, are:

$$R_{foot} = \frac{\rho}{4 * b}$$

$$R_{Mfoot} = \frac{\rho}{2 * \pi * d_{foot}}$$

Where

R_{foot} = Self resistance of each foot to remote earth in Ω

R_{Mfoot} = Mutual resistance between the feet in Ω

b = Equivalent radius of a foot in m

d_{foot} = Separation distance of the feet in m

The resistance of the ground beneath the two feet in series,

$$R_{2Fs} = 2 \times \left(R_{Foot} - R_{MFoot}\right)$$

The resistance of the ground beneath the two feet in parallel,

$$R_{2Fp} = \frac{1}{2} \times \left(R_{Foot} + R_{MFoot}\right)$$

The series and parallel foot resistances are approximated as follows:

$$R_{2Fp} = 1.5 \times \rho \qquad \text{Equation (A1)}$$

$$R_{2Fs} = 6 \times \rho \qquad \text{Equation (A2)}$$

we assume that the mutual resistance between the feet are neglected when deriving Equation (A1) and Equation (A2). This is a conservative assumption, as it gives a slightly higher estimation of body currents.

Figure A1 and Figure A2 illustrate the touch voltage circuit and the step voltage circuit respectively. The current of the accidental circuit (the current through the human body) is given by,

$$I_A = \frac{U}{R_A} \qquad \text{Equation (A3)}$$

Touch voltage Circuit

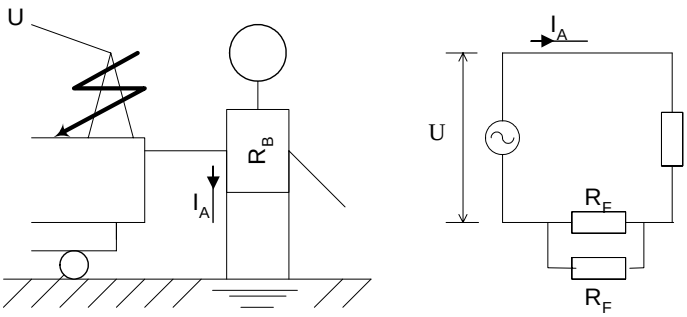

Figure A1: Touch Voltage Circuit (IEEE Std. 80 – 1986)

The equivalent circuit resistance, $R_A = R_B + \frac{1}{2} \times (R_F + R_{MF})$

From Equation (A1) $R_A = R_B + 1.5 \times \rho$

The current through the human body, $I_A = \dfrac{U}{R_B + 1.5 * \rho}$

The touch voltage $U_{touch} = I_A \times (1000 + 1.5 * \rho)$

Step voltage Circuit

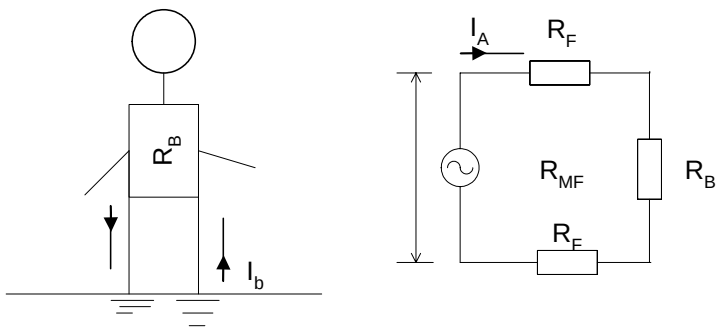

Figure A2: Step Voltage Circuit (IEEE Std. 80 – 1986)

The equivalent circuit resistance, $R_A = R_B + 2 \times (R_F - R_{MF})$

From Equation (A2) $R_A = R_B + 6 \times \rho$

The current through the human body, $I_A = \dfrac{U}{R_B + 6 * \rho}$

The step voltage $U_{step} = I_A \times (1000 + 6 * \rho)$

2. ANSI/ IEEE Std 80 – 2000

In this version of the standard, the current through the body is derived with the use of Thevenin equivalent network for the accidental circuit. The safe voltage limits in the main report were derived with the use of this method. This derivation method is briefly repeated here.

Touch Voltage Circuit

The fault current, I_f, is discharged to the ground by the substation grounding system and the person touching a grounded metallic structure at H. point H is at the same potential as the station grid and F is the small area on the surface of the earth that is in

contact with the person's two feet. The current, I_b, flows through the body of the person to the ground.

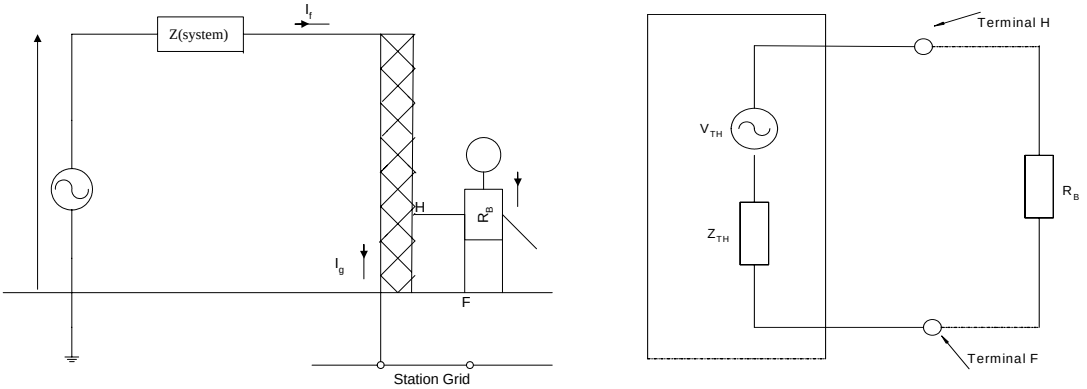

Figure A3: Touch Voltage Circuit (IEEE Std. 80 – 2000)

Step Voltage Circuit

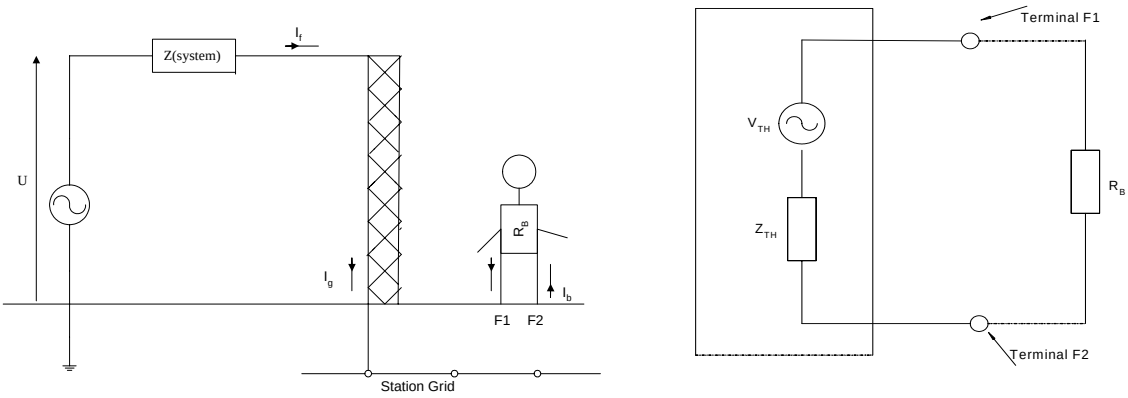

Figure A4: Step Voltage Circuit (IEEE Std. 80 – 2000)

F1 and F2 are the areas on the surface of the earth that are in contact with the two feet. The fault current, I_f, is discharged to the ground by the substation grounding system. The current, I_b, flows from one foot F1 through the body of the person to the other foot F2.

The Thevenin voltage V_{TH} is the voltage between the terminals when the person is not present (terminals H and F for the touch voltage circuit and terminals F1 and F2 for the step voltage circuit). The Thevenin impedance Z_{TH} is the impedance of the system as seen from the terminals with voltage sources of the system short-circuited. R_B is the resistance of the human body.

The current through the body of the person, I_b, is given by

$$I_b = \frac{V_{TH}}{Z_{TH} + R_B}$$

The following conservative formulas are used for the Thevenin equivalent impedance.

For touch voltage accidental circuit $\quad Z_{TH} = \frac{R_f}{2} \Rightarrow Z_{TH} = 1.5 * \rho$

For step voltage accidental circuit $\quad Z_{TH} = 2 * R_f \Rightarrow Z_{TH} = 6 * \rho$

The touch voltage $\quad U_{touch} = I_A \times (1000 + 1.5 * \rho)$

The step voltage $\quad U_{step} = I_A \times (1000 + 6 * \rho)$

Note:

The manner in which the above Thevenin impedances had been derived is not clearly defined in the IEEE standards. Our understanding of this specific problem is as follows. The touch voltage circuit is used here, as it is the most important safety parameter.

Impedances in the touch voltage circuit (Figure A3) are shown in Figure A5.

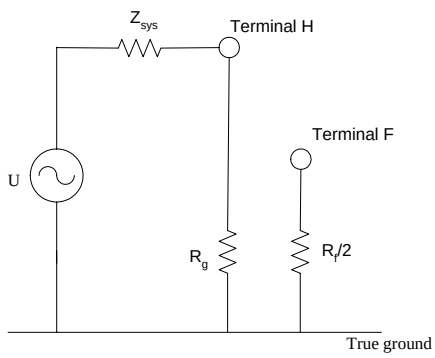

Figure A5: Impedances to touch voltage circuit

The Thevenin impedance Z_{TH} had been defined as the impedance of the system as seen from the terminals with voltage sources of the system short-circuited. Therefore

$$Z_{TH} = \{(Z_{sys}) parallel (R_g)\} + \left(\frac{R_f}{2}\right)$$

We can take $Z_{TH} \approx \frac{R_f}{2}$. This is a conservative assumption because a lower Thevenin impedance value would yield a higher body current ($I_b = \frac{V_{TH}}{Z_{TH} + R_B}$).

3. Paper published by Dawalibi and Colleagues

"Validity of conventional approaches for calculating body currents resulting from electric shocks" by F P Dawalibi, R D Southey and R S Baishiki, IEEE Transactions on Power Delivery, Vol. 5, No. 2, April 1990.

The above paper declares, "Significant inaccuracies can occur when the ANSI/IEEE Standard 80 based method is applied without understanding the assumptions which underlie it". The authors present a simple Thevenin model in order to present a theoretical basis for the equation for calculating body currents.

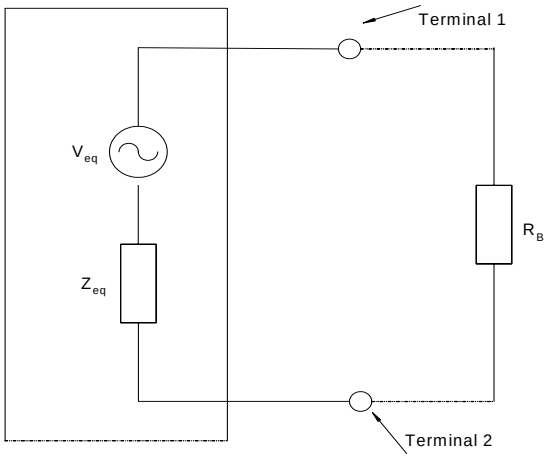

Figure A6: Thevenin equivalent circuit for touch voltage circuit

This Thevenin circuit is valid for a given grid configuration, a given foot size & location and a given soil resistivity. The Thevenin equivalent circuit parameters are

$$V_{eq} = V_{opencircuit}$$

$$R_{eq} = \frac{V_{eq}}{I_{shortcircuit}}$$

$$R_{eq} = \frac{V_{opencircuit}}{I_{shortcircuit}}$$

The current through the human body, $I_{body} = \dfrac{V_{eq}}{R_{eq} + R_B}$ Equation (A4)

This paper shows that R_{eq} is the resistance through earth between a human's feet and the grid. if the above Equation (A4) for calculating body current is to represent the IEEE standard 80-1986 formula, the following condition must hold.

$$R_{eq} = R_f / 2$$

Where $R_f / 2$ is the ground resistance of a human's two feet.

However R_f is fixed for a given soil type and foot size while R_{eq} could vary under these fixed conditions (by altering the grid size and the location with respect to the feet).

The main conclusions of this paper are

1. ANSI/IEEE Standard 80 – 1986 method is inaccurate when the resistance through earth between a human's feet and the grounding grid varies greatly compared to the remote foot resistance of the human's two feet
2. $R_{eq} = R_f / 2$ could be applied when a fault current independent of the presence of a human body can be assumed.
3. ANSI/IEEE Standard 80 – 1986 calculations are less accurate for low body resistance, high soil resistivity, good mutual coupling through earth between the feet and the grid and large ground resistance of the feet.
4. This study had been verified only for cases where the fault current is independent of the presence of a human body. This assumption is based on a transmission station grid where the grid impedance is very low compared to the system impedance. This assumption may not be valid for distribution systems.

The ANSI/ IEEE Standard 80 – 2000, uses the above Thevenin theory to calculate the currents through the human body.

Appendix B: Effects of a thin layer of surface material [1]

An analytical expression for the ground resistance of the foot on a thin layer of surface material is given below

$$R_f = \left(\frac{\rho_s}{4*b}\right) \times C_s \qquad \text{Equation (A1)}$$

$$C_s = 1 + \frac{16b}{\rho_s} \times \sum_{n=1}^{\infty} K^n R_{m(2nh_s)} \qquad \text{Equation (A2)}$$

$$K = \frac{\rho - \rho_s}{\rho + \rho_s} \qquad \text{Equation (A3)}$$

Where

C_s = Surface layer derating factor

K = Reflection factor between different material sensitivities

ρ_s = Surface layer resistivity in Ω. m

ρ = Resistivity of the earth beneath the surface material in Ω. m

h_s = Thickness of the surface material in m

b = Radius of the circular metallic disc representing the foot in m

$R_{m(2nh_s)}$ = Mutual ground resistance between the two similar, parallel, coaxial plates, separated by a distance $(2nh_s)$, in an infinite medium of resistivity, ρ_s, in Ω. M

C_s can be considered as a corrective factor to compute the effective foot resistance in the presence of a finite thickness of surface material. Evaluation of the quantity C_s using Equation (A2) is difficult without the use of a computer. Therefore value of C_s can be obtained by use of the following empirical equation

$$C_s = 1 - \frac{0.09 \times \left(1 - \frac{\rho}{\rho_s}\right)}{2h_s + 0.09} \qquad \text{Equation (A4)}$$

For $R_B = 1000\Omega$ and b = 0.08 m

The tolerable touch voltage in V

$$E_{touch} = I_B \times \left(R_B + \frac{R_f}{2} \right) \qquad \text{Equation (A5)}$$

For body weight of 50kg,

$$E_{touch,50} = \left(1000 + 1.5 * C_s * \rho_s\right) * \frac{0.116}{\sqrt{t_s}} \qquad \text{Equation (A6)}$$

For body weight of 70kg,

$$E_{touch,70} = \left(1000 + 1.5 * C_s * \rho_s\right) * \frac{0.157}{\sqrt{t_s}} \qquad \text{Equation (A7)}$$

The tolerable step voltage in V

$$E_{step} = I_B \times \left(R_B + 2R_f\right) \qquad \text{Equation (A8)}$$

For body weight of 50kg,

$$E_{step,50} = \left(1000 + 6 * C_s * \rho_s\right) * \frac{0.116}{\sqrt{t_s}} \qquad \text{Equation (A9)}$$

For body weight of 70kg,

$$E_{step,70} = \left(1000 + 6 * C_s * \rho_s\right) * \frac{0.157}{\sqrt{t_s}} \qquad \text{Equation (A10)}$$

C_s is determined from Equation (A2) or (A4).

ρ_s = Resistivity of the surface material in Ω. m

t_s = Duration of shock current in seconds

If no protective surface layer is used, then C_s=1 and $\rho_s = \rho$