DE1_Appendix II

MICROGRIDS

I.C.C.S. - N.T.U.A.

Project MICROGRIDS (ENK5-CT-2002-00610)

Work Package E
"Investigation of Safety and Protection Requirements"

Review of Earthing Practices in LV networks and installations

Author: M.Lorentzou

Further Authors: S.Papathanassiou
N.Hatziargyriou

January 2004

Contents

1. Introduction 3
1.1 Evolution of needs 3
1.2 Causes of insulation faults 4
1.3 Hazards linked to insulation faults 4
1.3.1 Electric Shock of persons 4
1.3.2 Fire 6
1.3.3 Unavailability of electrical power 6
1.3.4 Direct and indirect contacts 6
2. General Definitions and Terminology 8
2.1 General Definitions 8
2.2 Terminology 8
3. Earthing systems in LV installations 9
3.1 Earthing Systems Types 9
3.1.1 TN system 10
3.1.2 TT system 13
3.1.3 IT system 16
3.2 Earthing systems confronted with hazards 20
3.2.1 Fire 20
3.2.2 Electrical power unavailability 20
3.3 Influences of MV on LV 22
3.3.1 Lightning 22
3.3.2 Operating overvoltages 23
3.3.3 MV-frame disruptive breakdown of the transformer 23
3.3.4 MV-LV disruptive breakdown inside the transformer 25
3.4 Suitable switchgear selection 26
3.4.1 TN system 26
3.4.2 TT system 27
3.4.3 IT system 27
3.4.4 Neutral protection according to the earthing system 30
4. Review of International Standards and Practices Worldwide 31
4.1 Influence of MV earthing systems 31
4.2 LV earthing systems 33
4.2.1 In public distribution 34
4.2.2 In industrial and tertiary LV distribution 34
4.3 Earthing systems of private LV networks in some countries 35
4.4 Used Standards and Practices in Greece 38
4.4.1 General 38
4.4.2 Requirements for application of neutral earthing (TN system) 38
4.4.3 Earthing of the “metallic parts” at the LV networks 39
5. Selection of the suitable Earthing System 40
5.1 Earthing systems and disturbances in electronic systems 40
5.2 Choosing the earthing systems 41
5.2.1 For users and operators 41
5.2.2 For installation designers 42
6. Conclusions 44
7. References 44

1. Introduction

There are two major concerns that recommend the use of earthing systems in power generation installations:

- Voltage control: System earthing, or the intentional connection of a phase or neutral conductor to earth, controls the voltage to earth, or earth, within predictable limits. It also provides for a flow of current that will allow detection of an unwanted connection between system conductors and earth. When such a connection is detected, the earthing system may initiate operation of automatic devices to remove the source or voltage from the conductors with undesired connections to earth. The control of voltage to earth limits the voltage stress on the insulation of conductors so that insulation performance can more readily be predicted.
- Shock hazard: The control of voltage also allows reduction of shock hazard to persons who might come in contact with live conductors or parts of the installation.

The term “earthed” indicates that one or more parts of the electrical system are connected to the earth, which is considered to have zero voltage or potential. The earth is used as a reference because there is so much of it, and many conductive surfaces are connected or in contact with it. Most metallic objects such as metal building frames, as well as other electrical/electronic systems (TV, telephones, etc.) are in contact with or connected to earth. In some areas, the term “grounding” is used instead of “earthing”.

An earthing system consists of all interconnected earthing connections in a specific power system and is defined by its isolation or lack of isolation from adjacent earthing systems. The isolation is provided by transformer primary and secondary windings that are coupled only by magnetic means.

Research and experience have indicated that both earthed and unearthed electrical systems can be safe. Europeans have a 100 year tradition of operating unearthed electrical power systems, and European codes reflect this. The European community also makes use of double-insulated components and electronic earth-fault detectors in many applications. However, the common practice in LV systems is still earthing of the source neutral.

Electrical systems in the U.S. are generally solidly earthed to limit the voltage with reference to earth during normal operation and to prevent excessive voltages due to surges from lightning or unintentional cross connections with higher voltage lines.

1.1 Evolution of needs

Today the 3 earthing systems such as defined in IEC 60364 and French standard NF C 15-100, are the TN, the TT and the IT standard. The purpose of these three systems is identical as regards protection of persons and property: mastery of insulation fault effects. They are considered to be equivalent with respect to safety of persons against indirect contacts. However, the same is not necessarily true for dependability of the LV electrical installation with respect to electrical power availability and installation maintenance. These quantities, which can be calculated, are subjected to increasingly exacting requirements in factories and tertiary buildings. Moreover, the control and monitoring systems of buildings -TBM- and electrical power distribution management systems -TEM- play an increasingly important role in management and dependability.

This evolution in dependability requirements therefore affects the choice of earthing system. It should be borne in mind that the concern with continuity of service (keeping a sound network in public distribution by disconnecting consumers with insulation faults) played a role when earthing systems first emerged.

1.2 Causes of insulation faults

In order to ensure protection of persons and continuity of service, conductors and live parts of electrical installations are «insulated» from the frames connected to the earth. Insulation is achieved by the use of insulating materials and/or distancing, which calls for clearances in gases (e.g. in air) and creepage distances (concerning switchgear, e.g. an insulator flash over path). Insulation is characterised by specified voltages which, in accordance with standards, are applied to new products and equipment:

1. insulating voltage (highest network voltage);
2. lightning impulse withstand voltage (1.2; 50 ms wave);
3. power frequency withstand voltage (2 U + 1,000 V/1mn).

When a new installation is commissioned, produced as per proper practices with products manufactured as in standards, the risk of insulation faults is extremely small but as the installation ages, this risk increases. In point of fact, the installation is subject to various aggressions giving rise to insulation faults, for example:

- during installation:
  - mechanical damage to a cable insulator;
- during operation:
  - conductive dust,
  - thermal ageing of insulators due to excessive temperature caused by climate, -too many cables in a duct, poor ventilation , harmonics, overcurrents, etc,
  - the electrodynamic forces developed during a short-circuit which may damage a cable or reduce a clearance
  - the operating and lightning overvoltages
  - the 50 Hz return overvoltages, resulting from an insulation fault in MV.

It is normally a combination of these primary causes which results in the insulation fault. The latter is either of differential mode (between live conductors) and becomes short-circuit or of common mode between live conductors and frame or earth. A fault current -said to be common mode or zero sequence - then flows in the protective conductor (PE) and/or in the earth. *LV earthing systems are mainly concerned by common mode faults that mainly occur in loads and cables.*

1.3 Hazards linked to insulation faults

An insulation fault, irrespective of its cause, presents hazards for:

- human life;
- preservation of property;
- availability of electrical power;

1.3.1 Electric Shock of persons

A person (or animal) subjected to an electrical voltage is electrified. According to the gravity of the Electric Shock, this person may experience:

- discomfort;
- a muscular contraction;
- a burn;
- cardiac arrest (ventricular fibrilation) (see fig. 1).

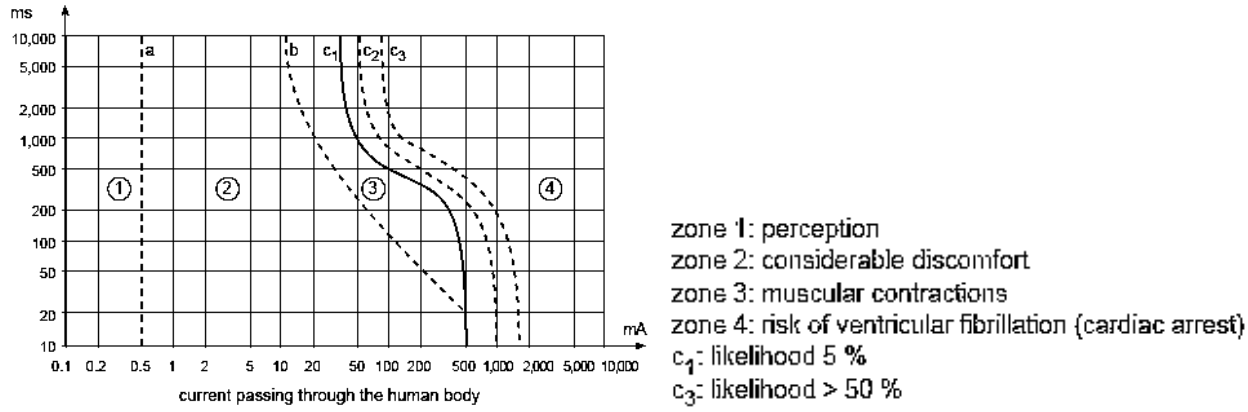

Fig. 1: time/current zones of AC current effects (15Hz to 100Hz) on persons as in IEC 479-1

Electric Shock is the first hazard to be considered since protection of persons against the dangerous effects of electric current takes priority. The current strength I -in value and time-, passing through the human body (in particular the heart) is the dangerous aspect. In LV, the impedance value of the body (an important aspect of which is skin resistance) virtually changes only according to environment (dry and wet premises and damp premises). In each case, a safety voltage (maximum acceptable contact voltage for at least 5 s) is the conventional limit voltage U_L defined in IEC 60479. According to IEC 60364 paragraph 413.1.1.1, if there is a risk of contact voltage U_c exceeding voltage U_L, the application time of the fault voltage must be limited by the use of protection devices (see fig. 2).

■ dry or wet premises and places: $U_L \leqslant 50$ V

presumed contact voltage (V)	maximum breaking time of the protection device (s)	
	AC	DC
< 50	5	5
50	5	5
75	0.60	5
90	0.45	5
120	0.34	5
150	0.27	1
220	0.17	0.40
280	0.12	0.30
350	0.08	0.20
500	0.04	0.10

■ damp premises and places: $U_L \leqslant 25$ V

presumed contact voltage (V)	maximum breaking time of the protection device (s)	
	AC (a)	DC (b)
25	5	5
50	0.48	5
75	0.30	2
90	0.25	0.80
110	0.18	0.50
150	0.10	0.25
220	0.05	0.06
280	0.02	0.02

Fig. 2: maximum time for maintenance of contact voltage as in standard IEC 364

1.3.2 Fire

This hazard, when it occurs, can have dramatic consequences for both persons and property. A large number of fires are caused by important and localised temperature rises or an electric arc generated by an insulation fault. The hazard increases as the fault current rises, and also depends on the risk of fire or explosion occurring in the premises.

1.3.3 Unavailability of electrical power

It is increasingly vital to master this hazard. In actual fact if the faulty part is automatically disconnected to eliminate the fault, the result is:

- a risk for persons due to sudden absence of lighting and/or placing out of operation of equipment required for safety purposes;
- an economic risk due to production loss. This risk must be mastered in particular in process industries, which are lengthy and costly to restart.

Moreover, if the fault current is high:

- damage, in the installation or the loads, may be considerable and increase repair costs and times;
- Circulation of high fault currents in the common mode (between network and earth) may also disturb sensitive equipment, in particular if these are part of a «low current» system geographically distributed with galvanic links. Finally, on de-energising, the occurrence of overvoltages and/or electromagnetic radiation phenomena may lead to malfunctioning or even damage of sensitive equipment.

1.3.4 Direct and indirect contacts

Before beginning to study the earthing systems, a review of Electric Shock by direct and indirect contacts will certainly be useful.

Direct contact and protection measures

This is accidental contact of persons with a live conductor (phase or neutral) or a normally live conductive element (see fig. 3a).

In cases where the risk is very high, the common solution consists in distributing electricity using a non dangerous voltage, i.e. less than or equal to safety voltage. This is safety by extra-low voltage (SELV or PELV), in LV (230/400 V).

In LV (230/400 V), protection measures consist in placing these live parts out of reach or in insulating them by means of insulators, enclosures or barriers. A complementary measure against direct contacts consists in using instantaneous ≤ 30 mA High Sensitivity Residual Current Devices known as HS-RCDs .

Treatment of protection against direct contacts is completely independent from the earthing system, but this measure is necessary in all circuit supply cases where implementation of the earthing system downstream is not mastered. Consequently, some countries make this measure a requirement:

- for sockets of rating ≤ 32 A,
- in some types of installations (temporary, worksite, etc.).

Indirect contact, protection and prevention measures

Indirect contact is the contact of a person with accidentally energised metal frames due to an insulation fault(see fig. 3b). A fault current flows and creates a potential rise between the frame and the earth, thus causing a fault voltage to appear which is dangerous if it exceeds voltage U_L. As regards this hazard, the installation standards (IEC 364 at international level) have given official status to three earthing systems and defined the

corresponding installation and protection rules. The protection measures against indirect contacts are based on three basic principles:

- **Earthing of the frames of loads and electrical equipment** to prevent an insulation fault that has a risk equivalent of a direct contact;
- **Equipotentiality of simultaneously accessible frames.**

Interconnection of these frames considerably helps to reduce contact voltage. It is performed by the protective conductor (PE) which connects the frames of electrical equipment for entire buildings, completed if required by additional equipotential links (see fig. 4).

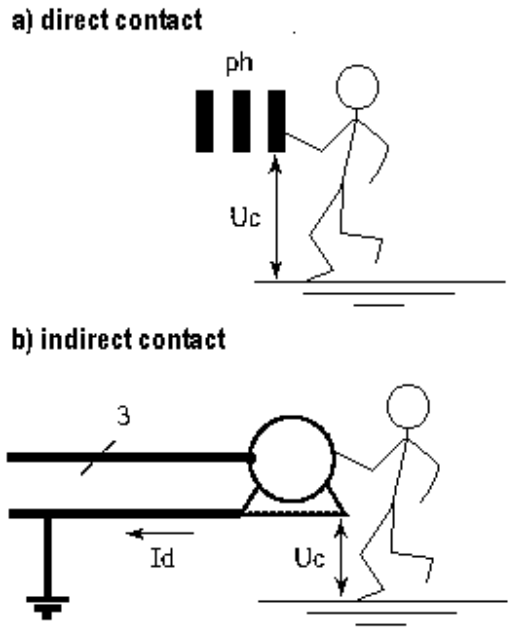

Fig. 3: direct and indirect contacts.

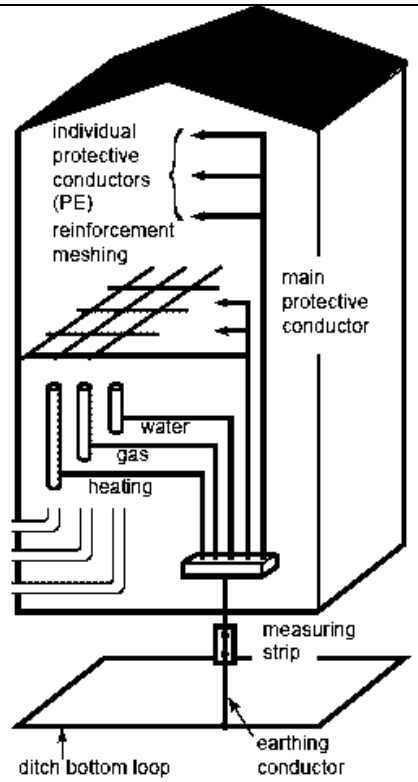

Fig. 4: equipotentiality in a building.

It should be reminded here that equipotentiality cannot be complete in all points. Consequently, for the study of earthing systems and their associated protection devices, the hypothesis chosen by standard makers Uc = Ud is applied since Uc is at the most equal to Ud where:

- Ud = "fault" voltage, with respect to the deep earth, of the frame of an electrical device with an insulation fault,
- Uc = contact voltage depending on the potential Uc and the potential reference of the person exposed to the hazard, generally the earth;

- **managing the electrical hazard**

This management is optimised by prevention. For example, by measuring insulation of a device before energising it, or by fault prediction based on live monitoring of insulation evolution of an unearthed installation (IT system). If an insulation fault occurs, generating a dangerous fault voltage, it must be eliminated by automatically disconnecting the part of the installation where this fault occurred. How the hazard is removed then depends on the earthing system.

2. General Definitions and Terminology

2.1 General Definitions

1. Metallic Objects or "Metallic" are the conductive parts of installations or devices, which are not insulated and which in normal operative conditions have not voltage difference to earth, but when a flashover or leakage occurs, or in any case of insulation failure, they may be have voltage difference to earth. In M.V./ L.V. substations, they are characterized as "metallic parts" the components that may be subject to voltage difference only from the low voltage side, as for example the L.V. fuses box. In low voltage network, "metallics" are also characterized some wire ropes, metallic frames, illuminants and metallic frames of meters. In indoors electrical installations, we characterize metallic the objects that need to be earthed and the objects that are earthed by their connection to the protection conductor of the installation
2. Earthing Resistance of a earthing electrode or a earthing system is the resistance to the "infinite earth". There exist directives for measuring the earthing resistance. The total earthing resistance of the neutral in the low voltage system is considered to be the one obtained from measurement at the point of the MV/LV substation that feeds the LV network. In case of neighboring LV networks, that is where there are common terminations, and where the neutral is bridged, in the total earthing resistance of each network is considered the earthing resistance of the other.
3. Single Earthing Systems Are two earthing electrodes or earthing systems, which when connected with a conductor of negligible resistance, they have a total resistance practically equal to the equivalent earthing resistance of the two earthing resistances as calculated from their "in parallel" synthesis. Two earthing systems are considered single, when they are in a sufficiently large separation distance, so that each of them can be practically out of the field that created by the other, when the current is dispersed into the soil. In practice usually when referring to single earthing electrodes, or earthing systems extended in a small area (up to 3m) they are considered single, when their conductive and non-insulated parts in the soil are placed more than 10m apart.
4. Earthing grid is the set of connected conductive parts (wires, strips, plates, bars, pipes) placed into the earth, in such a way that an "effective earthing" is ensured. "Effective earthing" is called the earthing installation when the appearance of dangerous touch voltages or step voltages is not possible in the close area of the installation, even in the worst case of fault current dispersion into the soil. The earthing system that ensures that in case of a fault, and until the action of protections, dangerous overvoltages will not appear is called "simple earthing". As concluded from the above, characterization of the earthing as "effective" or "simple" is depending on the characteristics of the network (maximum current of single-phase fault to earth and characteristic curve of current intention vs. time for the means of protection).
5. Touch Voltage (IEEE Definition) "The potential (voltage) difference between a earthed metallic structure and a point on the earth 3 ft from the structure."
6. Step Voltage: The potential (voltage) difference between two points on the surface of the earth in 1m distance"

2.2 Terminology

The terms used in the text are as follows

Electric Shock: Application of a voltage between two parts of the body

Electrocution: Electric Shock resulting in death

EMC: Electro Magnetic Compatibility
IDn: Operating threshold of a RCD
IMD: Insulation Monitoring Device
GFLD: Insulation Fault Location Device
MV/HV: Medium Voltage/High Voltage
RCD: Residual Current Device
SCPD: Short-Circuit Protection Device (circuit Beakers or fuses)
STD: Short Time Delay protection (protection against short-circuit overcurrents by circuit breaker with rapid trip release)
TBM: Technical Building Management
TEM: Technical Electrical Power Distribution Management
U_L: Conventional limit voltage (maximum acceptable contact voltage) known as the "safety" voltage
HS-RCDs : High Sensitivity Residual Current Devices
PE : protective conductor
SELV: Safety by Extra-Low Voltage
PELV : Protection by Extra-Low Voltage
PEN: N and PE neutral conductors are one and the same
MDT: Mean Down Time
UPS: Uninterruptible Power Supply
CS: Current Sensors

3. Earthing systems in LV installations

3.1 Earthing Systems Types

This section defines the various earthing systems, such as specified by the International Electrotechnical Committee in standard IEC 60364. The LV earthing system characterises the earthing mode of the secondary of the MV/LV transformer and the means of earthing the installation frames. Identification of the system types is thus defined by means of 2 letters:

1. the first one for transformer neutral connection (2 possibilities):
   T for "connected" to the earth,
   I for "isolated" from the earth;
2. the second one for the type of application frame connection (2 possibilities):
   T for "directly connected" to the earth,
   N for "connected to the neutral" at the origin of the installation, which is connected to the earth (see fig. 5).

Combination of these two letters gives three possible configurations:

1. TT: transformer neutral earthed, and frame earthed,
2. TN: transformer neutral earthed, frame connected to neutral,
3. IT: unearthed transformer neutral, earthed frame.

Also the TN system, as in IEC 60364 includes several sub-systems:

1. TN-C; if the N and PE neutral conductors are one and the same (PEN);

2. TN-S: if the N and PE neutral conductors are separate. This system is compulsory for networks with conductors of a cross-section ≤10 mm2 Cu
3. TN-C-S: use of a TN-S downstream from a TN-C (the opposite is forbidden).

Each earthing system can be applied to an entire LV electrical installation; however several earthing systems may be included in the same installation, (see figure 6).

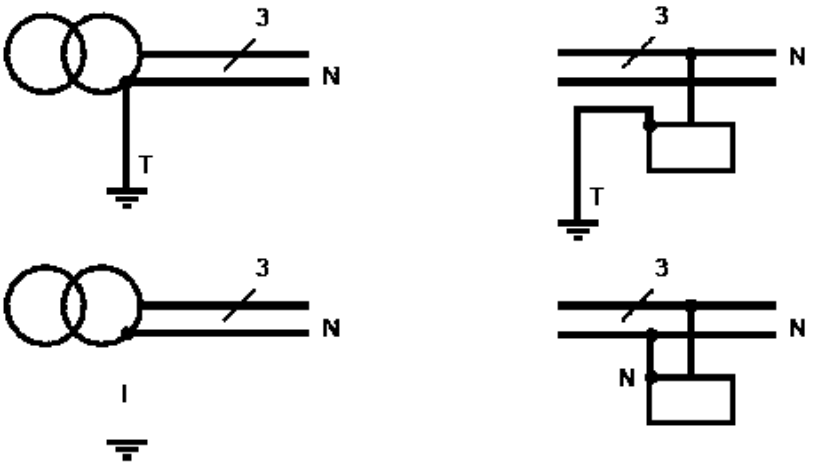

Fig. 5: connection mode of the neutral at the origin of the installation and of the frames of the electrical loads.

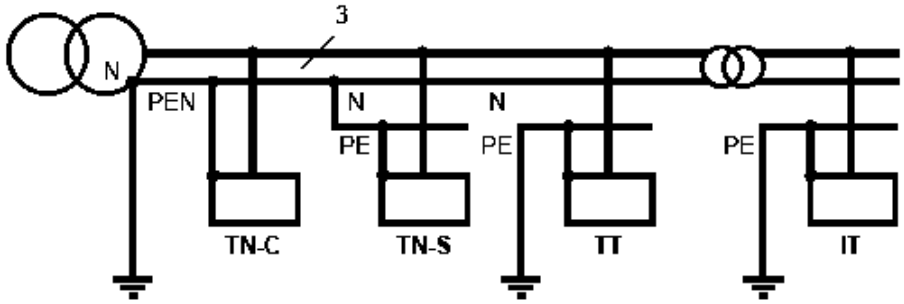

Fig. 6: example of the various earthing systems included in the same installation.

In French standard NF C 13-100 concerning delivery substations, in order to prevent hazards originating in MV, the LV earthing system is expressed by an additional letter according to interconnection of the various earth connections (see fig. 7).

additional letter	earthing of the MV/LV substation	earthing of the LV neutral	earthing of the LV application
R (connected)	■	■	■
N (of neutral)	■	■	□
S (separated)	□	□	□

(■ = interconnected, □ = separate)

Fig. 7: linking of LV earth connections with that of the MV/LV substation.

3.1.1 TN system

When an insulating fault is present, the fault current Id is only limited by the impedance of the fault loop cables (see fig. 8):

$$Id = \frac{Uo}{Rph_1 + Rd + R_{PE}}$$

For a feeder and as soon as Rd ≈ 0: $Id = \frac{0.8 \cdot Uo}{Rph_1 + R_{PE}}$

In point of fact, when a short-circuit occurs, it is accepted that the impedances upstream from the relevant feeder cause a voltage drop of around 20 % on phase-to-neutral voltage Uo, which is the nominal voltage between phase and earth. Id thus induces a fault voltage with respect to earth:

$$Ud = R_{PE} Id$$

Substituting Id from above, under the assumptions $R_{PE} = Rph$ and $Rd = 0$:

$$Ud = 0.8 \cdot Uo \frac{R_{PE}}{Rph_1 + R_{PE}} \Rightarrow Ud = \frac{0.8Uo}{2}$$

For 230/400 V networks, this voltage of around Uo/2 (if R_{PE} = Rph) is dangerous since it exceeds the limit safety voltage, even in dry atmospheres (U_L = 50 V). The installation or part of the installation must then be automatically and promptly de-energised (see fig. 9).

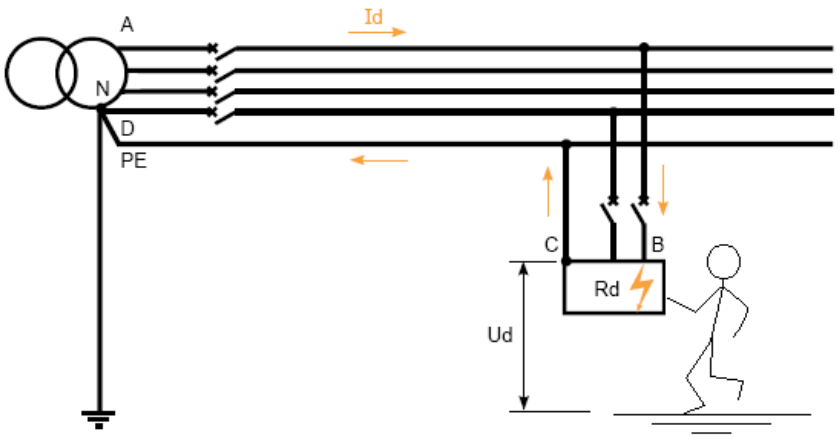

Fig. 8: fault current and voltage in TN system.

As the insulation fault resembles a phase-neutral short-circuit, breaking is achieved by the Short-Circuit Protection Device (SCPD) with a maximum specified breaking time depending on U_L.

Implementation

To ensure that the protection device really is activated, the current Id must be greater than the operating threshold of the protection device Ia (Id> Ia) irrespective of where the fault occurs. This condition must be verified at the installation design stage by calculating the fault currents for all the distribution circuits. If the same path is taken by the protective conductor - PE- and the live conductors, this will simplify the calculation. Certain country standards recommend this.

To guarantee this condition, another approach consists in imposing a maximum impedance value on the fault loops according to the type and rating of the SCPDs chosen (see British standard BS 7671). This approach may result in increasing the cross-section of the live and/or protective conductors.

Another means of checking that the device will ensure protection of persons is to calculate the maximum length not to be exceeded by each feeder for a given protection threshold Ia. To calculate Id and Lmax, three simple methods can be used:

- the impedance method;
- the composition method;
- the conventional method.

The latter gives the following equation: $Id = \frac{0.8 \cdot Uo}{Z} = \frac{0.8 \cdot Uo}{Rph + R_{PE}} = \frac{0.8 \cdot Uo \cdot Sph}{\rho(1+m)L}$

For the protection device to perform its function properly, Ia must be less than Id, hence the expression of Lmax, the maximum length authorised by the protection device with a threshold Ia:

$$L\max = \frac{0.8 \cdot Uo \cdot Sph}{\rho(1+m)L}$$

- Lmax: maximum length in m;
- Uo: phase-to-neutral voltage 230 V for a three phase 400 V network;
- ρ: resistivity to normal operating temperature
- Ia: automatic breaking current

1. for a circuit-breaker Ia = Im (Im operating current of the magnetic or short time delay trip release),
2. for a fuse, current such that total breaking time of the fuse (prearcing time + arcing time) complies with the standard (see fig. 9),
   - $m = \frac{Sph}{S_{PE}}$

If the line is longer than Lmax, either conductor cross-section must be increased or it must be protected using a Residual Current Device (RCD).

Uo (volts) phase/neutral voltage	breaking time (seconds) U_L = 50 V	breaking time (seconds) U_L = 25 V
127	0.8	0.35
230	0.4	0.2
400	0.2	0.05
≥ 400	0.1	0.02

Fig. 9: breaking time in TN system (taken from IEC 60364 tables 41 and 48A).

Evolution of the TN

The original aim of this earthing system was simplicity, efficiency and minimum installation cost (see the American TN where the neutral is not even protected); Safety of personnel is guaranteed, but that of property (fire, damage to electrical equipment) is less so. Proliferation of low current power electronics is increasing and will continue to increase complexity of its implementation. Derived from the TT of the nineteen twenties, the TN was a solution for controlling fault current value and ensuring that all insulation faults could be eliminated by a SCPD. The logical evolution is TN-C → TN-C-S →TN-S →TN-S with fault current limitation to limit fire hazards, damage to loads and malfunctionings due to widespread use of distributed electronics (see fig. 10). A survey carried out in Germany in 1990 showed that 28% of electrical (electronic) problems were due to EMC. In terms of protection, the TN system often uses fuses; already hindered by an overlong breaking time when limit safety voltage U_L is 25 V, they will be further hindered in the long term if LV networks with voltages greater than 230/400 V are developed. The use of RCDs (impedance-earthed TN-S) solves this problem.

a) TN-C earthing system

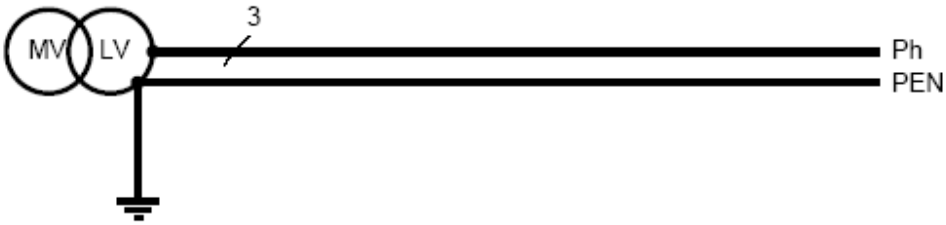

b) TN-C-S earthing system

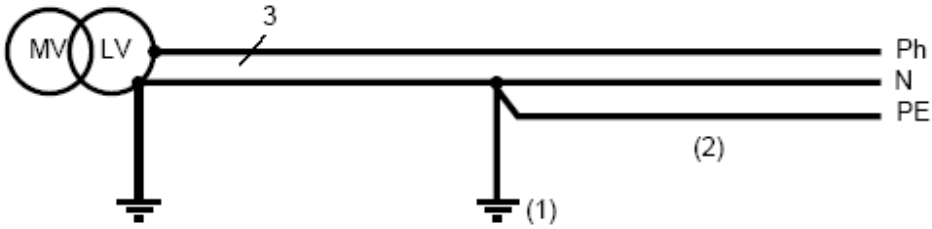

(1) New earth connection preferable if the transformer is at a distance (public distribution) improves local equipotentiality compared with the earth. This solution is used in many countries.

(2) in France, the C 15-100 stipulates changing to TN-S when cross-section of conductors is <10 mm2 Cu

c) TN-S earthing system

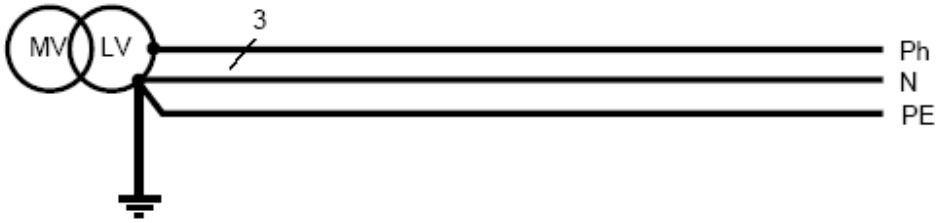

Avoids equipotentiality disturbances due to flow of neutral current and 3K harmonics in the PEN.

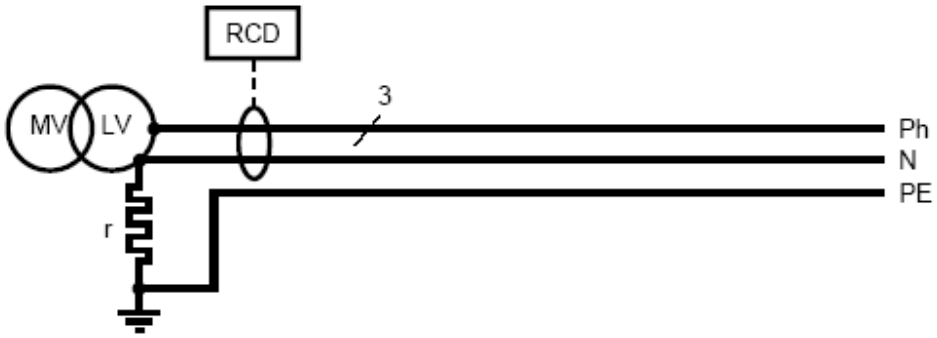

Solution used in the USA (Id of the order of 500 A), in RSA (I20 A); limits fire risks, damage and potential reference problems for distributed electronics. This earthing system is similar to the TT one.

Fig. 10: evolution of the TN.

3.1.2 TT system

When an insulation fault occurs, the fault current Id (see fig. 11) is mainly limited by the earth resistances (if the earth connection of the frames and the earth connection of the neutral are not associated). Still assuming that Rd = 0, the fault current is:

$$Id \approx \frac{Uo}{Ra + Rb}$$

This fault current induces a fault voltage in the earth resistance of the applications:

Ud = *Ra Id*, or $Ud = \frac{Uo \cdot Ra}{Ra + Rb}$

As earth resistances are normally low and of the same magnitude (≈10 Ω), this voltage of the order of Uo/2 is dangerous. The part of the installation affected by the fault must therefore be automatically disconnected (see fig. 12).

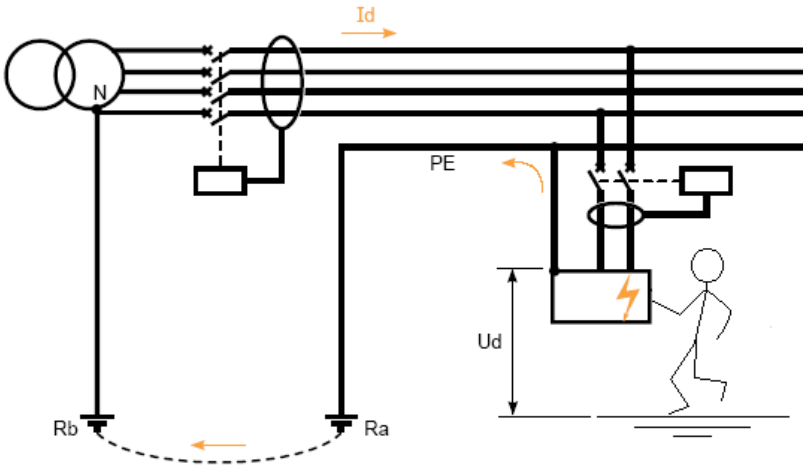

Fig. 11: fault current and voltage in TT system.

Implementation

As the fault current beyond which a risk is present ($Id_o = \frac{U_L}{Ra}$) is far lower than the settings of the overcurrent protection devices, at least one RCD must be fitted at the supply end of the installation. In order to increase availability of electrical power, use of several RCDs ensures time and current discrimination on tripping.

All these RCDs will have a nominal current threshold IDn less than Id0. The standard stipulates that de-energising by the RCDs must occur in less than 1 s. Note that protection by RCD:

- does not depend on cable length;
- authorises several separate Ra earth connections (an unsuitable measure since the PE is no longer a unique potential reference for the entire installation).

$I\Delta n \leqslant \frac{U_L}{Ra}$ maximum resistance of earth connection

U_L	50 V	25 V
3 A	16 Ω	8 Ω
1 A	50 Ω	25 Ω
500 mA	100 Ω	50 Ω
300 mA	166 Ω	83 Ω
30 mA	1,660 Ω	833 Ω

Fig. 12: upper limit of the resistance of the frame earth connection not to be exceeded according to RCD sensitivity and limit voltage U_L [I Dn = F(Ra)]

Evolution of the TT

To begin with, electrical distribution in France was in single-phase 110 V, followed by two-phase 220 V. Earthing of frames, combined with use of RCDs, aimed at de-energising consumers with insulation faults and cheaters. The development of electric household appliances led to protect people against indirect contacts. Protection against indirect contacts by RCD with standardised operating times was made official in the nineteen sixties. Today, the tendency is (as in TN and IT) to distribute the PE throughout the installation and thus to use only one application earth connection (see fig. 13). This tendency should continue with the use of the LV neutral earth connection only (as in TN and IT), but maintaining the advantage (damage, fire, EMC) of a small insulation fault current.

a) at the outset

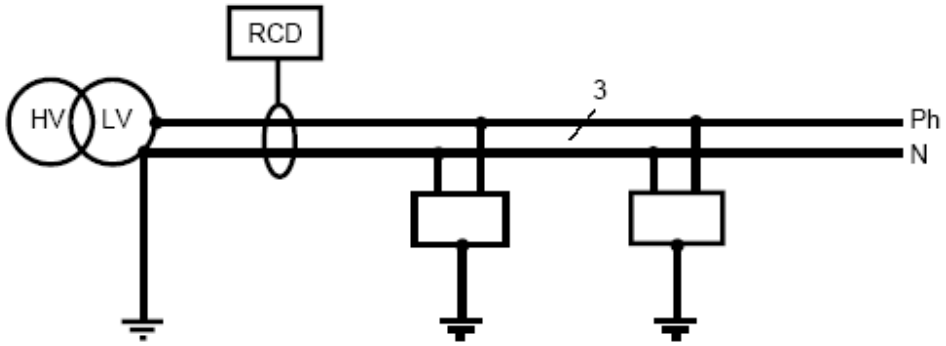

b) in 1960

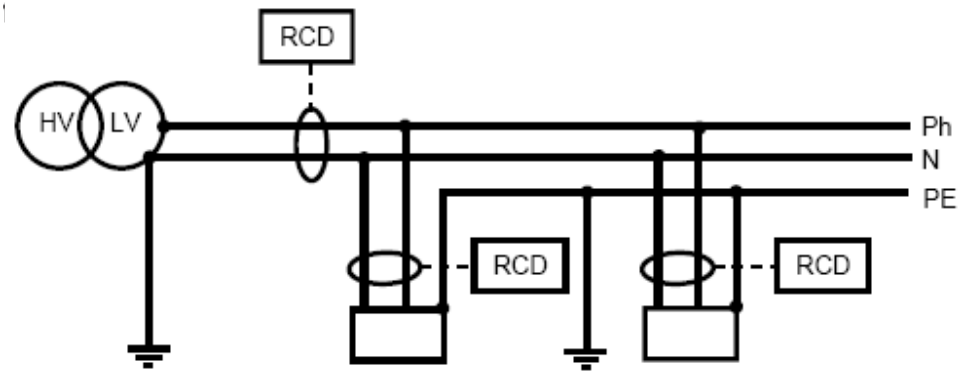

Multiple RCDs with time discrimination, local equipotentialites and minimum number of earth connections.

c) in 1990

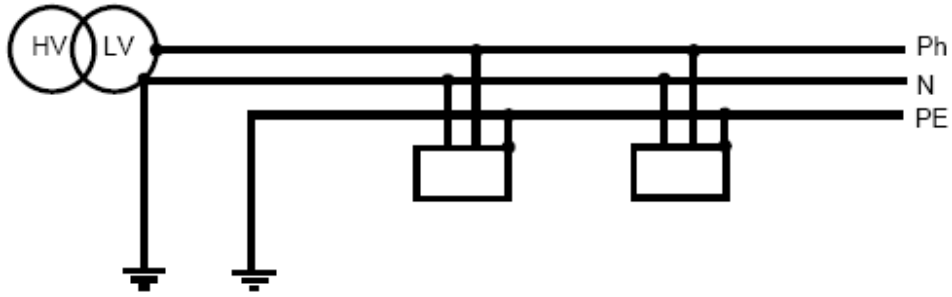

Same use of RCDs. PE distributed as in TN-S and IT. In some installations, the two earth connections are joined.

d) 2000

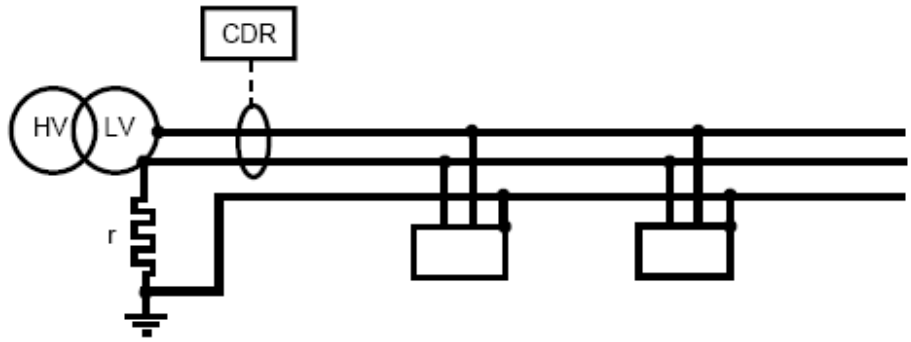

To retain the advantage of the small fault current (damage and EMC), an impedance-earthed TT (r ≈12 Ω/Id = 20 A) emerges with a single earth connection. This system requires the use of a surge limiter if the MV zero sequence current exceeds ≈80 A

fig. 13: evolution of the TT.

3.1.3 IT system

The neutral is unearthed, i.e. not connected to the earth. The earth connections of the frames are normally interconnected (just like the TN and TT earthing systems).

- In normal operation (without insulation fault), the network is earthed by the network leakage impedance.

The natural earth leakage impedance of a three-phase 1 km long cable is characterised by the standard values:

- C = 1 μF / km,
- R = 1 MΩ / km,

in 50 Hz it is:

- Zcf = 1 / j C w = 3,200 Ω,
- Zrf = Rf = 1 MΩ

therefore Zf ≈ Zcf = 3,200 Ω.

In order to properly set the potential of a network in IT with respect to the earth, impedance (Zn ≈ 1,500 Ω) can be placed between transformer neutral and the earth and this is the IT impedance-earthed system.

- Response on the first fault - Unearthed neutral:

The fault current is formed as follows (maximum value in the case of a full fault and neutral not distributed).

$If = Ic_1 + Ic_2$, where:

$Ic_1 = j\ Cf\ w\ V_{1\ 3}$,

$Ic2 = j\ Cf\ w\ V_{2\ 3}$

$Id = Uo_{\ 3}\ Cf\ w$.

For 1 km of 230/400V network, the fault voltage will be equal to:

Uc = Rb Id, i.e. 0.7 V if Rb = 10 Ω.

This voltage is not dangerous and the installation can thus be kept in operation.

If the neutral is distributed, the shift of neutral potential with respect to the earth adds a current

Icn = Uo Cf w and Id = Uo 4 Cf w (see fig. 14).

- Response on the first fault – Impedance earthed neutral:

Id = U/ Zeq where

$$\frac{1}{Zeq} = \frac{1}{Zn} + 3\,jCf\,\omega$$

The corresponding fault voltage is still low and not dangerous, so the installation can be kept in operation. Although risk-free continuity of service is a great advantage, it is necessary to know that there is a fault and to track it and eliminate it promptly, before a second fault occurs. To meet this need the fault information is provided by an Insulation Monitoring Device (IMD) monitoring all live conductors, including the neutral. Locating is performed by means of fault trackers.

- Response on the second fault:

When a second fault occurs and the first fault has not yet been eliminated, there are the possibilities:

1. the fault concerns the same live conductor: nothing happens and operation can continue,
2. the fault concerns two different live conductors:

if all the frames are inter-connected, the double fault is a short-circuit (via the PE). The Electric Shock hazard is similar to that encountered with the TN system. The most unfavourable conditions for the SCPDs (smallest Id) are obtained when both faults occur on feeders with the same characteristics (cross-sections and lengths) (see fig. 15). The SCPDs have to comply with the following relationships:

-if the neutral is distributed and one of the two faulty conductors is the neutral: $Ia \leq \frac{0.8 \cdot Uo}{2Z}$

-or if the neutral is not distributed: $Ia \leq \frac{0.8 \cdot Uo\sqrt{3}}{2Z}$

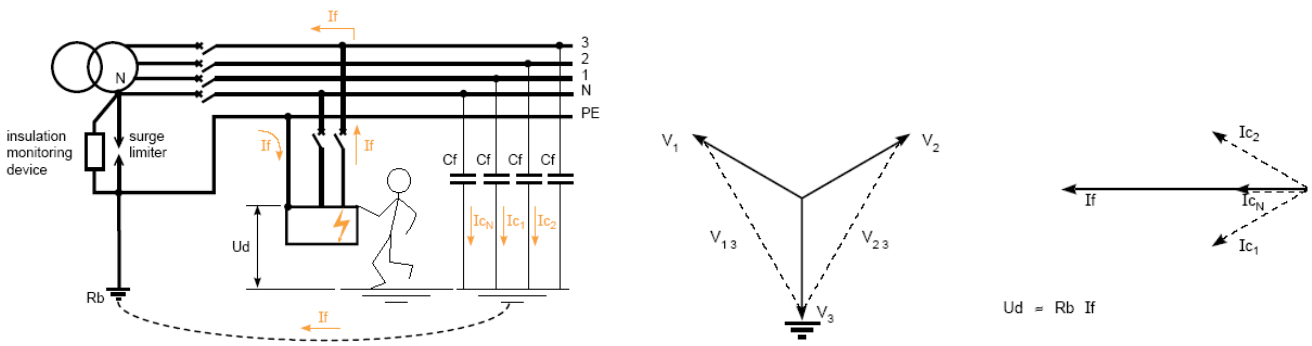

Fig. 14: first insulation fault current in IT system.

If one of the two faults is on the neutral, the fault current and fault voltage are twice as low as in the TN system. This has resulted in standard makers authorising longer SCPD operating times (see fig. 16). Just as in the TN earthing system, protection by SCPD only applies to maximum cable lengths:

-distributed neutral: $L\max = \frac{1}{2}\frac{0.8 \cdot Uo \cdot Sph}{\rho(1+m)Ia}$

-non-distributed neutral: $L\max = \frac{\sqrt{3}}{2}\frac{0.8 \cdot Uo \cdot Sph}{\rho(1+m)Ia}$

This is provided that the neutral is protected and its cross-section equal to phase cross-section. This is why certain country standards advise against distributing the neutral.

- Case where all frames are not interconnected.

For frames earthed individually or in groups, each circuit or group of circuits must be protected by a RCD. In point of fact, should an insulation fault occur in groups connected to two different earth connections, the earthing

system's reaction to the insulation fault (Id, Ud) is similar to that of a TT system (the fault current flows through the earth). Protection of persons against indirect contacts is thus ensured in the same manner IDn ≤U_L/Ra (see table in figure 16).

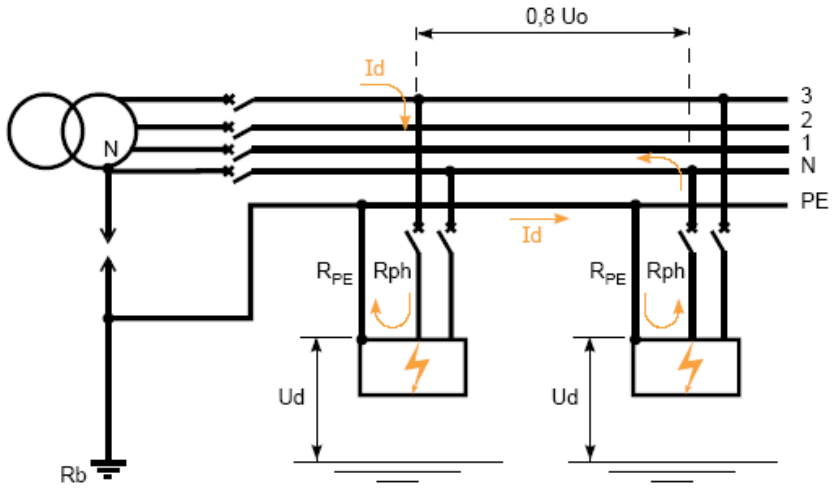

$$Id \approx \frac{0.8Uo}{2(R_{PE} + Rph)} \qquad Ud \approx \frac{0.8Uo}{4}$$

Fig. 15: 2nd insulation fault current in IT system (distributed neutral) and relevant feeders with the same cross-section and length.

Uo/U (volts) Uo: phase/neutral voltage U: phase to phase voltage	U_L = 50 V breaking time (seconds) Neutral not distributed	 Neutral distributed	U_L = 25 V breaking time (seconds) Neutral not distributed	 Neutral distributed
127/220	0.8	5	0.4	1.00
230/400	0.4	0.8	0.2	0.5
400/690	0.2	0.4	0.06	0.2
580/1 000	0.1	0.2	0.02	0.08

Fig. 16: maximum breaking times specified in IT system (as in IEC 60364 tables 41B and 48A).

In view of the times specified by the standard, horizontal time discrimination can be achieved to give priority to continuity of service on certain feeders. In order to protect LV unearthed networks (IT) against voltage rises (arcing in the MV/LV transformer, accidental contact with a network of higher voltage, lightning on the MV network), a surge limiter can be installed between the neutral point of the MV/LV transformer and the earth (Rb).

Evolution of the IT

The earliest electrical installations (1920) were produced in IT. However, double faults quickly gave this system a bad name (failure to master loop impedances). Standards gave it official status in the sixties in order to meet continuity of service requirements of process industries and safety requirements in mines. Today, the IT system closely resembles the TN-S as regards installation (an additional surge limiter and insulation monitor). It is the champion of continuity of service and safety on the first fault, if this fault is promptly tracked and eliminated. Following widespread use of the distributed PE throughout the installation (as in TN), this system, in which the second fault current cannot be limited, will not really evolve, except for the rapid fault tracking techniques. As the

likelihood of a double fault increases with the number of feeders and size of the installation, its use should be reserved for parts of the network and for control and monitoring circuits with, naturally, use of isolating transformers (see fig. 18). On these small circuits, use of the impedance-earthed IT allows signalling RCDs for fault tracking.

a) at the outset

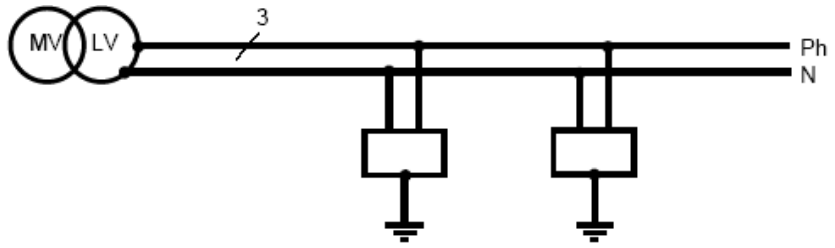

b) in 1960

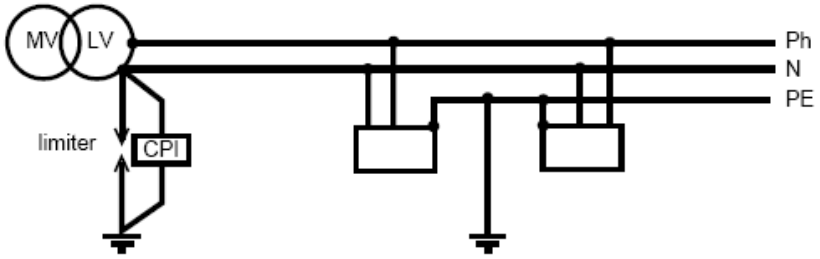

Limitation of number of earth connections and interconnection of frames or use of RCD to master the double fault.

c) in 1990

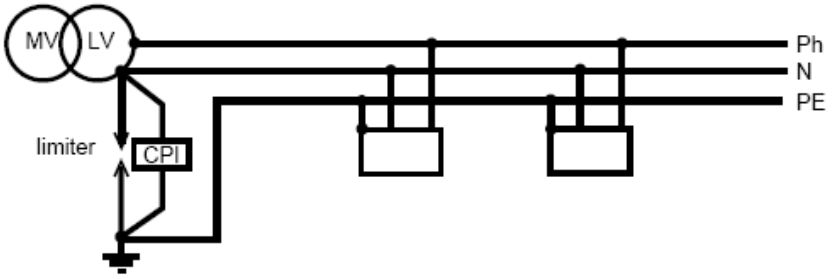

Becoming more similar to the TN-S (PE distributed, calculation of loop impedances).

d) 2000

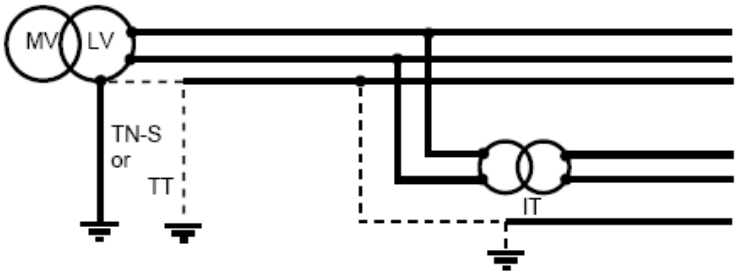

IT is used mainly on small networks or parts of networks downstream from TN and TT systems.

fig. 18: evolution of the IT.

So as to obtain a concise overview of the quantities characterising the various earthing systems, as regards protection of persons, the main formulas are listed in the table in figure 17.

		Id	Ud	Lmax	continuity of service
TN		$\frac{0.8\ Uo\ Sph}{\rho\ (1+m)\ L}$	$\frac{0.8\ Uo}{1+m}$	$\frac{0.8\ Uo\ Sph}{\rho\ (1+m)\ Ia}$	vertical discrimination
TT		$\frac{Uo}{Ra+Rb}$	$\frac{Uo\ Ra}{Ra+Rb}$	no constraint	vertical discrimination
IT	1st fault	< 1 A	<< U_L		no tripping
	double fault with neutral	$\leqslant \frac{1}{2}\ \frac{0.8\ Uo\ Sph}{\rho\ (1+m)\ L}$	$\leqslant \frac{m}{2}\ \frac{0.8\ Uo}{1+m}$	$\frac{1}{2}\ \frac{0.8\ Uo\ Sph}{\rho\ (1+m)\ Ia}$	vertical discrimination and possibility of horizontal discrimination to the advantage of hich current feeders
	double fault between phases	$\leqslant \frac{\sqrt{3}}{2}\ \frac{0.8\ Uo\ Sph}{\rho\ (1+m)\ L}$	$\leqslant \frac{m\ \sqrt{3}}{2}\ \frac{0.8\ Uo}{1+m}$	$\frac{\sqrt{3}}{2}\ \frac{0.8\ Uo\ Sph}{\rho\ (1+m)\ Ia}$	

Remember that:

- $\rho = 22\ 10^{-6}\ \Omega/mm^2/m$ for Cu (36 for Al);
- $m = \frac{Sph}{S_{PE}}$;
- PE cross-section, normally equal to phase cross-section, can be equal to half of phase cross-section when the latter exceeds 35 mm^2.... thus increasing Ud in TN and IT.

Fig. 17: characteristic quantities of earthing systems.

3.2 Earthing systems confronted with hazards

3.2.1 Fire

It has been proved, then accepted by standard makers, that contact between a conductor and a metal part can cause fire to break out, in particularly vulnerable premises, when the fault current exceeds 500 mA. To give an example, premises particularly at risk can be petrochemical factories, farms while premises averagely at risks, but where consequences may be very serious are very high buildings receiving the general public. In the unearthed neutral system, the risk of "fire" is very small on the first fault but is as important as in TN on the second fault. For the TT and TN earthing systems, the fault current is dangerous given the power developed (P = Rd I2):

- in TT = 5A < Id < 50 A;
- in TN = 1 kA < Id < 100 kA.

The power present where the fault has occurred is considerable, particularly in the TN system, and prompt action is vital as from the lowest current levels in order to limit the dissipated energy ($\int Rd \cdot i^2 dt$). This protection, specified by the IEC is provided by an instantaneous RCD with threshold ≤500 mA, regardless of the earthing system. When risk of fire is especially high (manufacture/ storage of inflammable materials etc) it is necessary and indeed compulsory to use an earthing system with earthed frames which naturally minimises this hazard (TT or IT).

The TN-C system is banned in certain countries when a risk of fire and/or explosion is present because the PE and neutral conductors are one and the same and RCDs cannot be used.

3.2.2 Electrical power unavailability

This hazard is a major one for operators, since it results in non-production and repair costs that can be high. It varies according to the earthing system chosen. Availability (D) is a statistical quantity (see fig. 19) equal to the ratio between time during which the mains is present and reference time equal to the time "mains present + mains absent". Mean Down Time (MDT) also depends on the fault current and in particular on its strength which,

according to its value, may cause damage of varying degrees to loads, cables, fires and malfunctionings on the low current control and monitoring equipment.

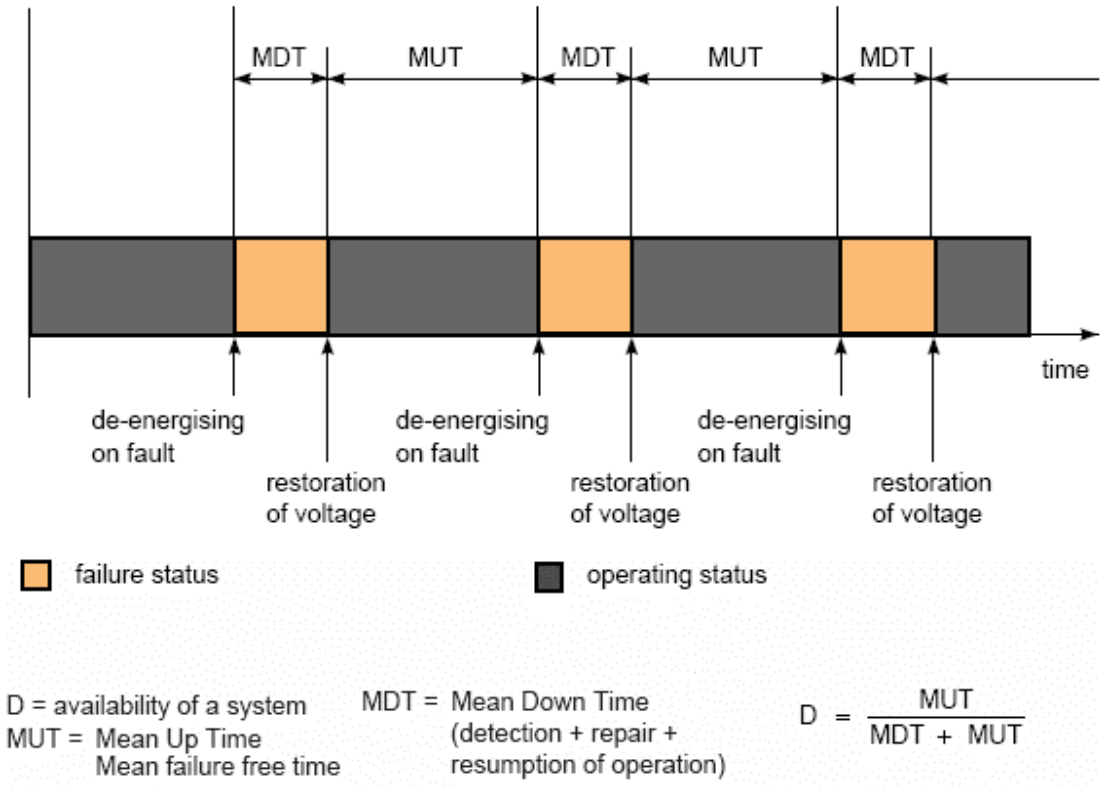

Fig. 19: availability of electrical power.

Each earthing system must therefore be examined as regards availability of electrical power, with special emphasis on the IT earthing system since it is the only one that authorises non-tripping in the presence of a fault.

- IT earthing system :

In order to retain the advantage of this system, i.e. not interrupting electrical distribution on the first fault, the second fault must be prevented, since this then presents the same high risks as the TN system. The first fault must therefore be eliminated before a second fault occurs. The use of efficient detection and locating methods and the presence of a reactive maintenance team considerably reduces the likelihood of the "double fault". Moreover, monitoring devices are currently available which monitor in time the evolution in insulation of the various feeders, perform fault prediction and thus anticipate maintenance of the first fault. This ensures maximum availability with the IT earthing system.

- TN and TT earthing systems.

These systems use discrimination on tripping. In TN, this is acquired with short-circuit protection devices if the installation protection plan has been properly designed (disrimination by current and duration selectivity). In TT, it is easy to implement thanks to the RCDs which ensure current and time discrimination. Remember that, in TN system, repair time according to $\int i^2 dt$, may be longer than in TT system, which also affects availability.

- For all the earthing systems

It is always useful to anticipate insulation faults and in particular those of certain motors before startup (almost20 % of motor failures are due to an insulation fault which occurs on energising). In point of fact, an insulation loss, even small, on a hot motor cooling down in a damp atmosphere (condensation) degenerates into a full fault on restarting. This fault causes both considerable damage to windings and production loss and even major risks if the motor has a safety function (drainage, fire, fan pump motor, etc.). This type of incident can be prevented, whatever the earthing system, by an Insulation Monitoring Device monitoring the load with power off. If a fault occurs, startup is then prevented. To round off this section on "the hazard presented by electrical power unavailability" it is clear that, regarding proper electrical power availability, the earthing systems can be listed in the following order of preference: IT, TT, TN.

If - to ensure continuity of service - the installation is fitted with a generator set or a UPS (Uninterruptible Power Supply) in "off line", there is a risk of failure to operate or of delayed operation of the SCPDs (the short-circuit current is lower) on changeover to the replacement source (lowest Isc - see fig. 20). In TN and IT, for safety of persons and property, it is thus vital to check that the protection conditions are always met (operating time and threshold), especially for very long feeders. If this is not so, then RCDs must be used.

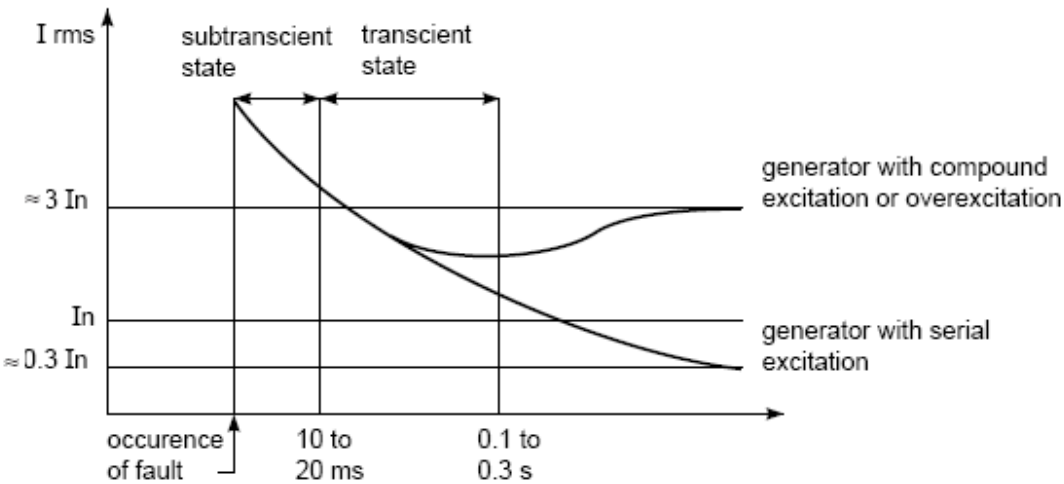

Fig. 10: making a short-circuit in a network supplied by a diesel standby generator.

3.3 Influences of MV on LV

LV networks, unless a replacement uninterruptible power supply (with galvanic insulation) or a LV/LV transformer is used, are influenced by MV. This influence takes the form of:

- capacitive coupling: transmission of overvoltage from MV windings to LV windings;
- galvanic coupling, should disruptive breakdown occur between the MV and LV windings;
- common impedance, if the various earth connections are connected and a MV current flows off to earth.

3.3.1 Lightning

If the MV network is an overhead one, the distributor installs ZnO lightning arresters to limit the effects of a direct or an indirect lightning stroke. Placed on the last pylon before the MV/LV substation, these lightning arresters limit overvoltage and cause lightning current to flow off to earth.

A lightning wave, however, is transmitted by capacitive effect between the transformer windings, to the LV live conductors and can reach 10 kV peak. Although it is progressively weakened by the stray capacities of the network This results in LV disturbances, often overvoltages, whose generating phenomena are MV incidents:

- lightning;
- operating overvoltages;
- MV-frame disruptive breakdown inside the transformer;
- MV-LV disruptive breakdown inside the transformer.

Their most common consequence is destruction of LV insulators with the resulting risks of Electric Shock of persons and destruction of equipment with respect to earth, it is advisable to install surge limiters (lightning arresters) at the origin of the LV network, whatever earthing system is used (see fig. 21).

To prevent coupling by common impedance, it is wise never to connect MV lightning arresters and lightning rods placed on the roof of buildings to the earth connection of the LV neutral. The lightning current would cause a rise in potential of the PE and/or the LV neutral (risk of disruptive breakdown by return) and loss of earth connection effectiveness by vitrification.

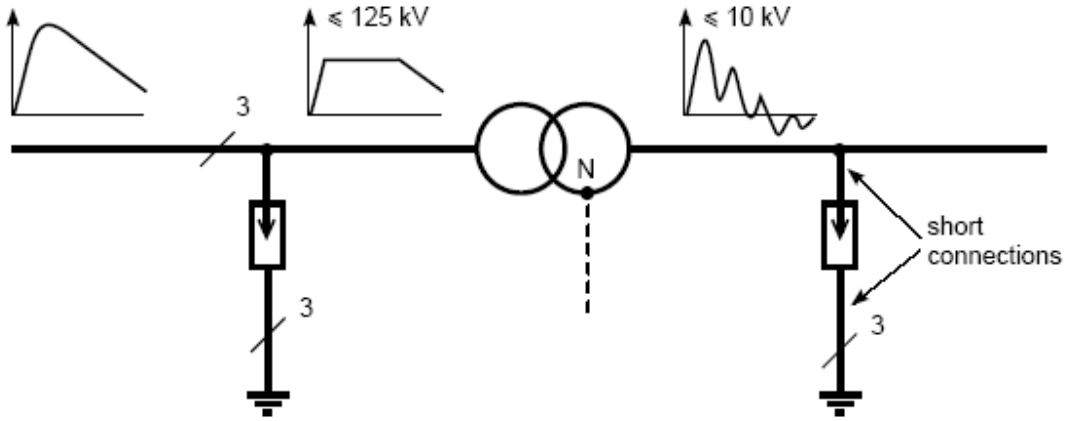

Fig. 21: limitation and transmission of lightning overvoltages (whether or not the neutral is earthed, there are common mode overvoltages on phases).

3.3.2 Operating overvoltages

Some MV switchgear (e.g. vacuum circuit breakers) cause considerable overvoltages when operated. Unlike lightning which is a common mode disturbance (between network and earth), these overvoltages are, in LV, differential mode disturbances (between live conductors) and are transmitted to the LV network by capacitive and magnetic coupling. Just like all differential mode phenomena, operating overvoltages do not interfere, or only very slightly, with any of the earthing systems.

3.3.3 MV-frame disruptive breakdown of the transformer

On MV-frame disruptive breakdown inside the transformer and when the transformer frame and LV installation neutral are connected to the same earth connection, a MV "zero sequence" currrent (whose strength depends on the MV earthing system) can raise the frame of the transformer and neutral of the LV installation to a dangerous potential. The value of the transformer earth connection directly conditions the contact voltage. Just like all differential mode phenomena, operating overvoltages do not interfere, or only very slightly, with any of the earthing systems. In the substation Ut ≤Rp Ih_{MV} and the dielectric withstand voltage of the LV equipment in the substation

Utp = Rp Ih_{MV} (if the LV neutral earth is separate from the substation one). The earth connections of the substation and of the LV neutral are not generally connected. If however they are, a limit is given to the common earth connection value to prevent a rise in potential of the LV network compared with the deep earth. Figure 22 gives the common earth connection values for the Ih_{MV} values of French public networks.

diagrams (1)	maximum resistance of the earth connection of substation frames Rp (Ω)

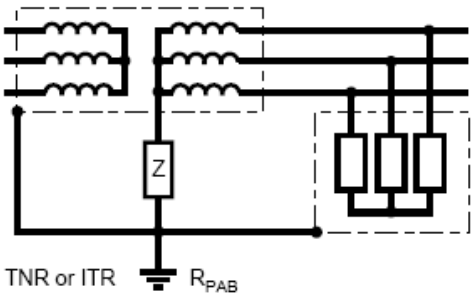

no value stipulated but the following values prevent potential rise of the assembly

Ih_{MV} (A)	R_{PAB} (Ω)
300	3 to 20
1,000	1 to 10

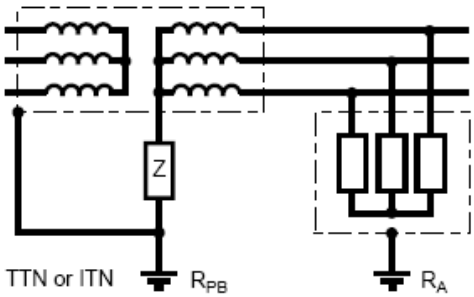

Ih_{MV} (A)	R_{PB} (Ω)
300	3
1,000	1

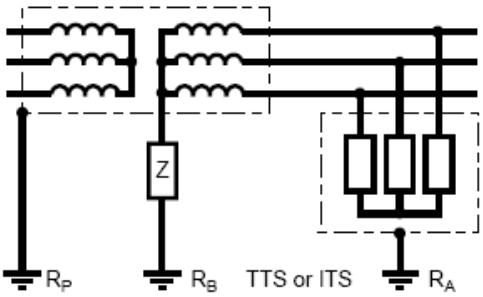

Utp (kV)	2	4	10
Ih_{MV} (A)	R_P (Ω)		
300	4	8	20
1,000	1	3	10

Z: direct earthing in TN and TT
impedance-earthed or unearthed in IT with presence of a discharger.
Ih_{MV}: maximum strength of the first earth single-phase fault current of the high voltage network supplying the substation.
Utp: power frequency withstand voltage of the low voltage equipment of the substation.

(1) the third letter of the earthing systems means:
- all the frames are linked R;
- the substation frame is connected to the Neutral frame: N;
- the earth connections are Separated S.

Fig. 22: maximum resistance of the earth connection of the substation frames according to network earthing system.

The standard IEC 364-4-442 explains the risks according to LV earthing systems. The fault currents encountered in public networks range from 10 A (impedance compensated systems) to 1,000A or more. MV industrial networks are often run in impedance-earthed IT and have a zero sequence current Ih_{MV} of a few dozens of amps. The maximum value authorised for the earth connection depends on the equipotentiality conditions of the frames of the LV network, i.e. on its earthing system.

3.3.4 MV-LV disruptive breakdown inside the transformer

To prevent potential with respect to the earth of the LV network from rising to the phase-to-neutral voltage of the MV network on MV-LV disruptive breakdown inside the transformer, the LV network must be earthed. The consequences of this fault are:

- in TN: The entire LV network, including the PE, is subjected to voltage Ih_{MV} R_{PAB} or R_{AB}. If this overvoltage exceeds the dielectric withstand of the LV network (in practice of the order of 1,500 V), LV disruptive breakdowns are possible if the equipotentiality of all the frames, electrical or not, of the building is not complete
- in TT: Whereas the load frames are at the potential of the deep earth, the entire LV network is subjected to Ih_{MV} R_{PB} or R_B: there is a risk of disruptive breakdown "by return" of loads if the voltage developed in R_{PB} or R_B exceeds their dielectric withstand;
- in IT: Operation of a surge arrester which short-circuits itself as soon as its arcing voltage is reached, then brings the problem to the level of the TN network one (or TT if there are several application earth connections).

In all cases, MV/LV disruptive breakdowns give rise to constraints that can be severe, both for the LV installation and loads, if the value of the LV neutral earth connection is not controlled. IEC 364 explains risks according to the earthing systems. The example of overhead public distribution in France provides a solution to a situation where risks of lightning, operating overvoltage and transformer frame-MV and MV-LV disruptive breakdown are present (see fig. 23). It shows that equipotentiality of the entire distribution (all MV frames, neutrals and application frames connected) is not vital: each risk is dealt with separately.

Section 3.2 has described the influence of the MV network. Its conclusions are:

1. It is suggested to use lightning arresters at the origin of the LV installation, whatever the earthing system type, if the MV and particularly the LV supply is overhead;
2. Connection of the earth connection of the substation with the earth connection of the LV neutral or with those of the application frames, imposes variable constraints on the LV network according to the MV earthing system (value of Ih)

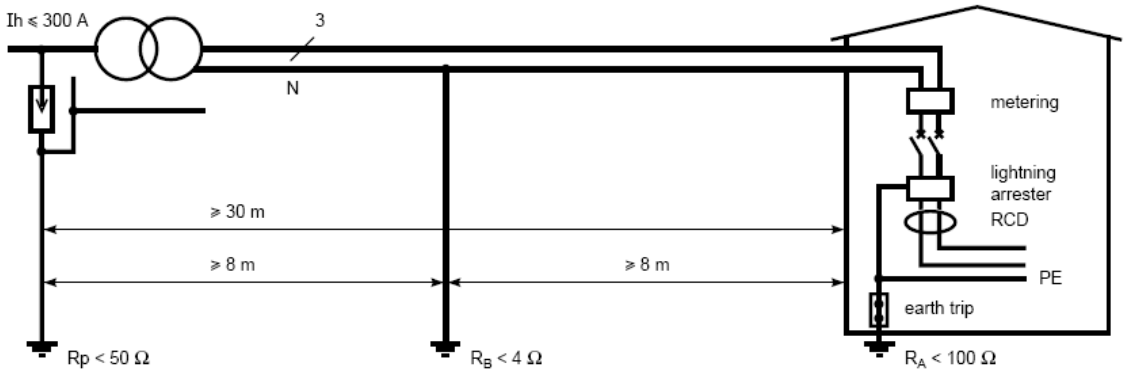

Fig. 23: rural overhead public distribution in France.

3.4 Suitable switchgear selection

Choice of earthing system affects not only dependability (in the largest sense) but also installation, in particular with respect to the switchgear to be implemented.

3.4.1 TN system

In this system the SCPDs (circuit-breaker or fuses) generally provide protection against insulation faults, with automatic tripping according to a specified maximum breaking time (depending on phase-to-neutral voltage Uo: see fig. 9).

- with circuit-breaker

Circuit-breaker tripping occurs at a level determined by the type of the tripping release (see fig. 24). As soon as the fault current exceeds the threshold of the short-circuit protection trip release (generally "instantaneous"), opening occurs in a time far shorter than specified maximum breaking time, for example 5 s for distribution circuits and 0.4 s for terminal circuits. When impedance of the source and cables is high, either low threshold trip releases must be used or RCDs associated with the SCPDs. These RCDs may be separate residual current devices or be combined with circuit-breakers (residual current circuit-breakers) of low sensitivity. Their threshold must be:

$$I\Delta n < \frac{0.8 \cdot Uo}{Rph + R_{PE}}$$

Use of a RCD has the advantage of making loop impedance checking unnecessary, a fact which is of particular value when the installation is modified or extended. This solution is clearly not applicable with a TN-C type earthing system (the protective conductor being the same as the neutral one).

- with fuses

The fuses used for short-circuit protection are of the gG type and their time/current characteristics (see fig. 25) are defined by standards (household fuses: IEC 60241, industrial fuses: IEC 60269). Checking suitability with the maximum specified breaking time therefore calls for individual validation of the ratings provided for each protection device. If they are not suitable, either fault loop impedance must be reduced (increased cross-sections) or the fuse must be replaced by a low threshold or a residual current circuit-breaker.

	trip release type	operating threshold
household (EN 60898)	B	3 In ⩽ Ia ⩽ 5 In
	C	5 In ⩽ Ia ⩽ 10 In
	D	10 In ⩽ Ia ⩽ 20 In
industrial (IEC 947-2)	G (low threshold)	2 In ⩽ Ia ⩽ 5 In
	D	5 In ⩽ Ia ⩽ 10 In
	MA (for motor starter)	6.3 In ⩽ Ia ⩽ 12.5 In

Fig. 24: tripping current (magnetic or short time delay) of LV circuit-breakers.

In gG (A)	Imin. 10 s	Imax. 5 s	Imin. 0.1 s	Imax. 0.1 s
63	160	320	450	820
80	215	425	610	110
100	290	580	820	1,450

Fig. 25: example of fuse operating threshold limits (as in IEC 60269 paragraph 5-6-3).

3.4.2 TT system

With this system, the small value of the fault currents (see previous section) does not allow the SCPDs to protect persons against indirect contacts. RCDs (see fig. 26) need to be used, associated with circuit-breakers or switches (see IEC 60364 - paragraph 413.1.4.2). These devices must meet the following standards in particular:

- IEC 60755: general rules;
- IEC 61008: "household" residual current switches;
- IEC 61009: «household» residual current SCPDs;
- IEC 60947-2: «industrial» residual current circuit-breakers.

Their implementation must meet the objectives for:

- protection of persons, i.e.:
  - threshold IDn $\leq U_L/R_A$,
  - breaking time $\leq$ 1s;
- continuity of service with thresholds and time delays enabling current and time discrimination;
- fire protection with IDn $\leq$ 500 mA.

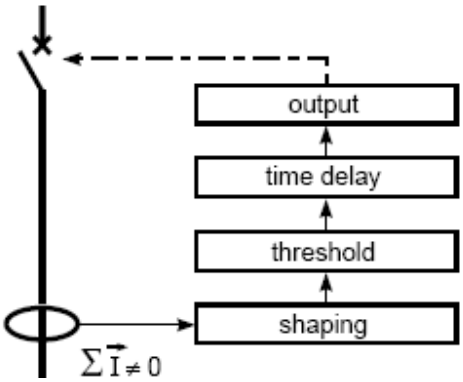

Fig. 26: functional diagram of an RCD.

3.4.3 IT system

Remember that in the event of a double fault, safety of persons is provided by the SCPDs. When the first insulation fault occurs, the calculation proved there was no risk (contact voltage lower than limit safety voltage). Automatic de-energising is therefore not compulsory: this is the main advantage of this system.

To retain this advantage, standards recommend (IEC 60364 - paragraph 413.1.5.4) or stipulate the use of an Insulation Monitoring Device (IMD) and locating of the first fault. In point of fact, if a second fault occurs, automatic breaking is vital due to the Electric Shock risk: this is then the role of the SCPDs backed up by the RCDs if required. Locating the first fault for repairs (curative maintenance) is considerably simplified by the use of a Ground Fault Location Device (GFLD). Predictive maintenance, based on the monitoring (recording) of variations in insulation impedance of each circuit, is also possible. LV networks using the IT system, which take their origin at a MV/LV transformer, must be protected against risks of insulation faults between MV and LV by a «surge limiter». Finally, to fix the potential of the LV network with respect to the earth (short network supplied by a MV/LV transformer), an impedance can be installed between the transformer neutral and the earth. Its value in 50 Hz, of

the order of 1,500 Ω, is very high in DC and in very low frequency so as not to obstruct insulation measurement and fault locating.

- Operating principle of the IMDs. A fault on a circuit results in a drop in insulation, or more precisely in resistance of the network with respect to earth. In France, the IMDs and GFLDs have to comply with manufacturing standard UTE 63080.

The purpose of the IMDs is thus to monitor the value of this resistance. They normally work by injecting an AC or DC current between the network and the earth and by measuring the value of this current (see fig. 27).

Injection of a DC current ensures continuous knowledge of network insulation resistance. If this resistance drops below a pre-set threshold, then the IMD reports the fault. Injection of low frequency AC current (of a few hertz) monitors fault resistance but with a distortion due to the presence of network leakage capacitances. This minor drawback compared with injection frequency is made up for by an advantage in first fault locating (one single injection device). LF current injection devices are now available which can separately give the network's insulation resistance and reactance. Moreover, they enable locating of the first fault without circuit opening and without the problems due to highly capacitive feeders.

- Operating principle of the GFLDs

The most common solution is to inject an identifiable current (with a frequency other than network one). The generator can be the IMD. Then, by means of magnetic Current Sensors (toroidal transformers and/or clamp-on probes) associated with an amplifier tuned to the injected current frequency, to trace its path up to the fault (see fig. 28). Finally, another solution is also used, which consists in comparing, constantly and for each feeder, the value of its resistance with a predefined threshold value. This solution, computerised, enables the following actions, both locally and remotely:

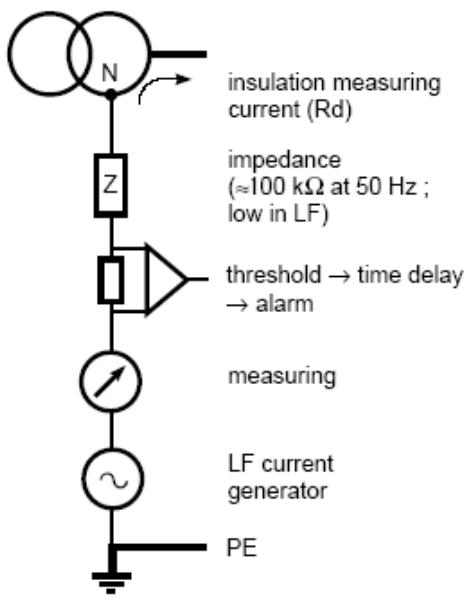

Fig. 27 : functional diagram of an Insulation Monitoring Device (IMD).

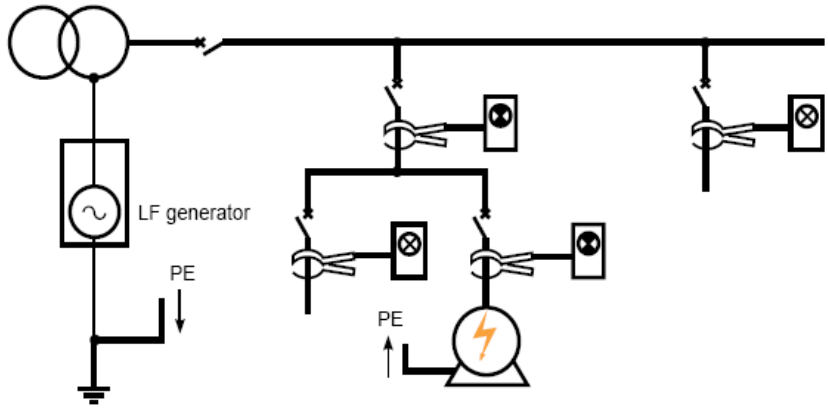

Fig. 28 : locating insulation faults by tracing the path of a low frequency current injected at the origin of the installation.

- Reporting of the first fault (IMD)
- then locating of this fault (GFLD) to put it right (curative maintenance) (see fig. 29),
- and knowledge of insulation evolution in time, feeder by feeder, to take action on feeders with abnormal insulation drops (predictive maintenance).

▪ Surge limiters: these are connected between a live conductor (neutral or phase) of the installation and the earth. Their arcing voltage Ue must therefore be adapted to the assembly planned: thus there are two models for a 50 Hz 230/400 V network:

- 250 V for connection to the neutral (400V<Ue ≤ 750 V)
- 400 V, for connection to a phase (700V<Ue ≤1,100 V)

Their purpose is:

- to limit voltage on the LV network on MV/LV disruptive breakdown in the distribution transformer. In this case, the limiter must flow off to earth the "residual" current of the MV network,
- to limit lightning overvoltages.

This accounts for their characteristics, for example for the 250 V model:

-rated voltage: 250 V,

-disruptive breakdown voltage at 50 Hz: min 400 V, max 750 V,

-disruptive breakdown voltage according to the1.2/50 µs wave: u < 1,570 V,

-lightning: 20 times 2,500 A (8/20 µs wave): without short-circuiting

$I_{50\ Hz}$: 20,000 A / 0.2s,
5,000 A /5 s,
1,200 A /2 mn.

The 50 Hz peak current withstand is far greater than the value of the "residual" current of the MV network. This is because a limiter that has been "arced" during a very high overvoltage may continue to be short-circuited and must therefore be still able to withstand a LV short-circuit current from a first insulation fault in the protected LV network (limiters in the market can commonly withstand 40 kA/0.2 s). The locating current flowing in the conductors is detected by Current Sensors (CS). Each load comprising a discriminating amplifier (set to the frequency and phase of the locating current) calculates the resistance and capacitance of the circuit (with the voltage and phase whose reference it obtains via a bus) and indicates the presence of the fault.

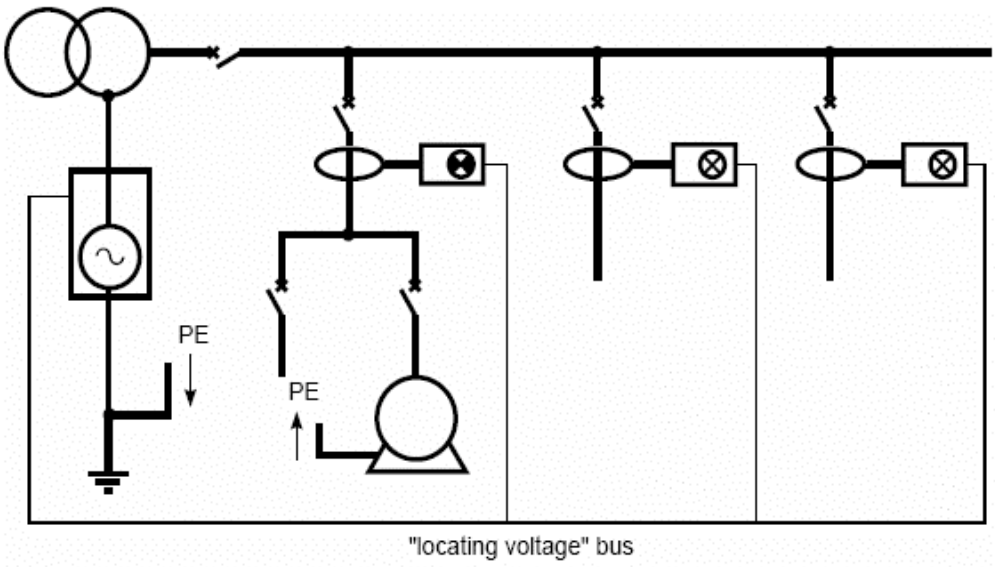

The locating current flowing in the conductors is detected by Current Sensors (CS). Each load comprising a discriminating amplifier (set to the frequency and phase of the locating current) calculates the resistance and capacity of the circuit (with the voltage and phase whose reference it obtains via a bus) and indicates the presence of the fault.

Fig. 29: operating principle of a GFLD with LF impedance measurement.

3.4.4 Neutral protection according to the earthing system

The neutral must be broken by a multi-pole device:

- in TT and TN, if neutral cross-section is less than phase cross-section;
- in terminal distribution in view of the Neutral/ Phase reversal risk.

The neutral must be protected and broken:

- in IT for intervention of the protection device on the double fault, with one of the faults possibly on the neutral;
- in TT and TN-S if neutral cross-section is less than phase cross-section;
- for all earthing systems if the installation generates harmonic currents of rank 3 and multiples (especially if neutral cross-section is reduced).

In TN-C the neutral, which is also the PE, cannot be broken which is dangerous as a result of its potential variations, due to load currents and insulation fault currents. To prevent risks, a local equipotentiality and an earth connection must be provided for each zone/consumer. Figure 30 shows which types of circuit-breaker should be used for which earthing system. Note that TT and TN can use the same devices (with an additional residual current module in TT).

circuits	diagrams TN-C	TN-S	TT	IT
single phase circuits				
single phase circuits with one protected pole	no	yes	yes	no
two-pole circuit-breaker (1 protected pole, 2 de-energized poles)				

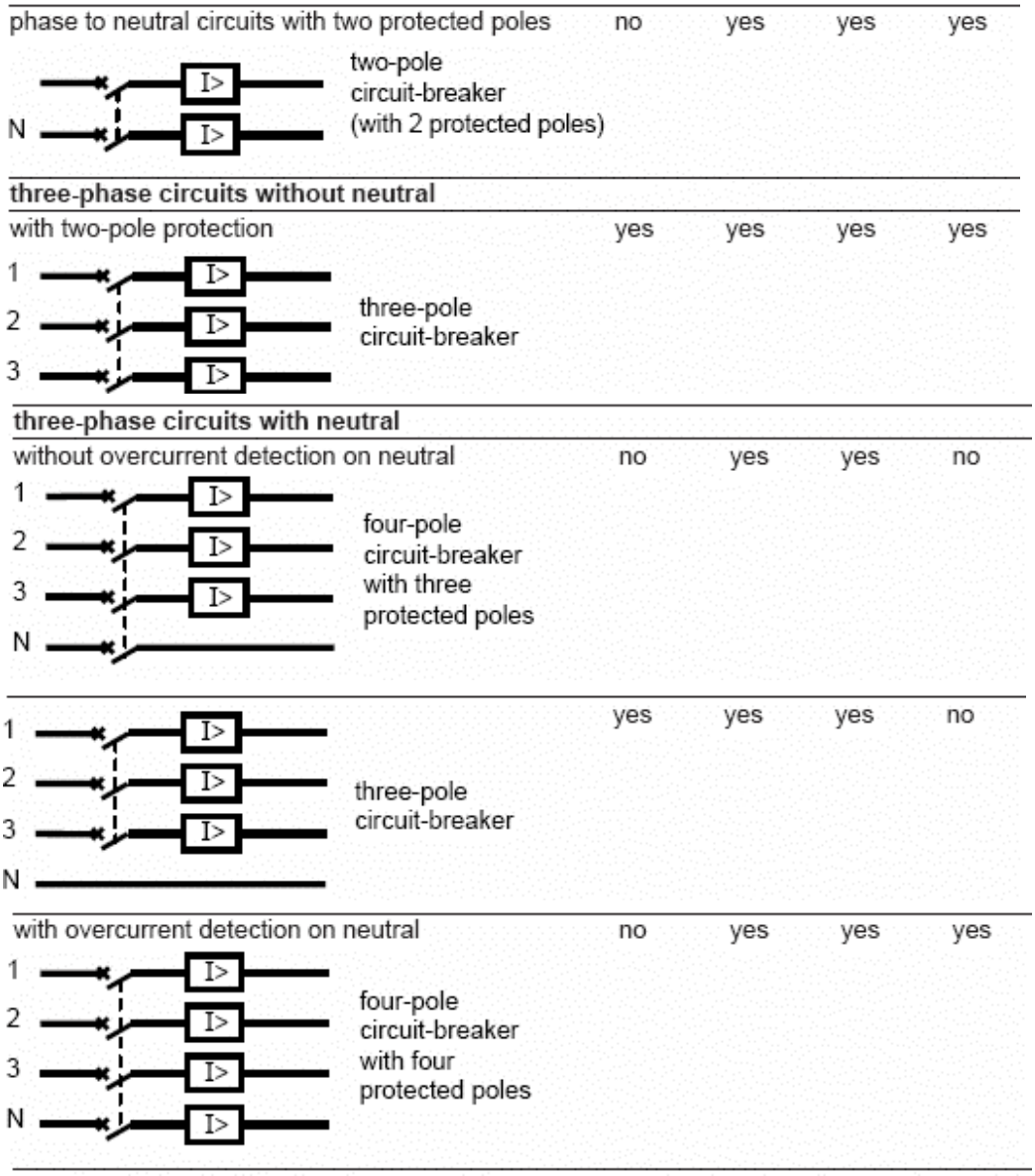

Fig. 30: examples of circuit-breakers according to earthing systems.

4. Review of International Standards and Practices Worldwide

4.1 Influence of MV earthing systems

In public and industrial MV, except in certain special cases, the neutral is not distributed and there is no protective conductor (PE) between substations or between the MV load and substation. A phase/earth fault thus results in a single-phase short-circuit current limited by earth connection resistance and the presence of limitation impedances, if any (zero sequence).

The current tendency, in various countries, is to limit the zero sequence fault currents of MV networks, thus allowing:

- Increased continuity of service (availability of electrical power) by authorizing automatic reconnection on a transient fault,
- connection or not of the frames of the MV/LV substation and those of the LV neutral to avoid risk for LV users and equipment.

IEC 364-4-442 states that the earthing system in a MV/LV substation must be such that the LV installation is not subjected to an earthing voltage of:

- Uo + 250 V: more than 5 s;
- Uo + 1,200 V: less than 5 s

($U_o\sqrt{3}$ in IT). This means that the various devices connected to the LV network must be able to withstand this constraint (see fig. 31a).

fig. 31a: if Rp and R_B are connected, the fault current causes the potential of the LV network to rise with respect to the earth.

The same standard states that if $R_p > 1\Omega$ the voltage Rp Ih_{MT} must be eliminated, for example:

- in under 500 ms for 100 V
- in under 100 ms for 500 V.

If this is not so, R_p and R_N must be separate whatever the LV earthing system. This rule, not always complied with in certain countries, often leads to the separation of the two earth connections (for MV networks with a high zero sequence fault current). If all the earth connections (substation-neutral- applications) have been grouped into a single one, a rise in potential of LV frames may be observed which could be dangerous (fig. 31b)

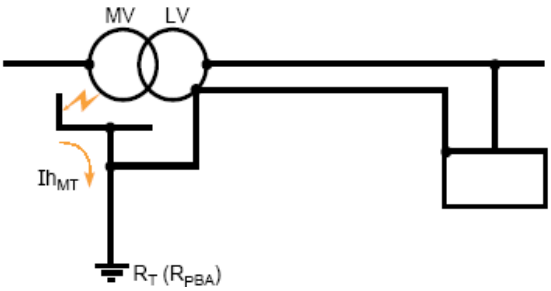

fig. 31b: the LV load frames are raised to the potential Ih_{MT} R_T.

The table in figure 32 gives a few examples for public distribution worldwide. It shows that, in many countries, the earth connections of the substation and neutral must be separate if their resulting value is not less than 1 Ω. Note that the impedance-earthed IT earthing system is the most commonly used in MV industrial networks. The «zero sequence generator» supplies a resistive current around twice the capacitive current of the network, thus allowing use of a RCD to ensure protection by disconnection of the faulty feeder.

country	MV earthing system	frame connection	observations
Germany 10 and 20 kV	unearthed or compensed Id < 60 A	connected if Id x R_T < 250 V	Rp < 2 Ω or 5 Ω
Australia 11 and 12 kV	directly earthed Id= a few kA	separated except if R_T < 1 Ω	Rp < 10 Ω
Belgium 6.3 and 11 kV	limitation impedance Id < 500 A	separated d ≥ 15 m	Rp < 5 Ω
France 20 kV	limitation impedance	separated except if R_T	
overhead	Id ≤ 300 A	< 3 Ω	Rp < 30 Ω
underground	Id ≤ 1,000 A	< 1 Ω	Rp < 1 Ω
Great Britain 11 kV	direct or limitation impedance Id < 1,000 A	separated except if R_T < 1 Ω	Rp < 25 Ω
Italy 10-15 and 20 kV	unearthed Id ≤ 60 A (more in reality)	separated	Rp < 20 Ω
Ireland 10 and 38 kV	unearthed on 10 kV compensated on 38 kV Id < 10 A	separated except if R_T < 10 Ω	stipulations on how to produce Rp
Japan 6.6 kV	unearthed Id < 20 A	connected R_T < 65 Ω	
Portugal 10 to 30 kV	limitation impedance	separated except if R_T < 1 Ω	Rp < 20 Ω
overhead	Id ≤ 300 A		
underground	Id ≤ 1,000 A		
USA 4 to 25 kV	directly earthed or by low impedance Id = a few kA	connected	the earths of the source of the MV/LV substation and of the LV neutral are connected

fig. 32: public distribution examples - MV earthing systems.

4.2 LV earthing systems

The MV/LV transformers used are generally DY 11 (delta/star). However the use of midpoint single-phase distribution for public distribution in the USA and Japan should be pointed out (see fig. 33).

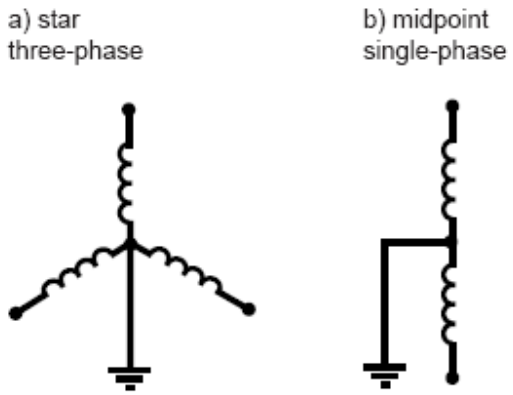

fig. 33: Coupling of the secondary windings of MV/LV transformers.

Most countries apply or derive inspiration from standard IEC 364 which defines the TN, IT and TT earthing systems and the protection conditions, both for public and private distribution.

4.2.1 In public distribution

The most common systems are TT and TN; a few countries, in particular Norway, use the IT system. The table in figure 34 lists some examples for public distribution (LV consumers).

country	LV earthing system	observations
Germany 230/400 V	TT and TN-C	the TN is the most commonly used; R_T must be < 2 Ω; earth connection at the consumer's, even in TN
Belgium 230/400 V	TT	Ru < 100 Ω 30 mA RCD for sockets
Spain 230/400 V	TT	Ru < 800 Ω with 30 mA RCD at supply end of the installation
France 230/400 V	TT	Ru < 50 Ω, (100 Ω shortly) 30 mA RCD for sockets
Great Britain 240/415 V	TT and TN-C	- town areas: TN-S and TN-C (New Est installations: 15 %), the earth connection (< 10 Ω) of the neutral is provided by the distributor - rural areas: TT
Italy 230/400 V	TT	RCD with IΔn as a function of Ru (IΔn < 50/Ru). For consumers without earth connection 30 mA RCD
Japan 100/200 V	TT	Ru < 100 Ω, frequent use of 30 mA RCD, no search for equipotentiality
Norway 230/400 V	IT	premises in insulating materials and poor earth connections account for this choice. homes with signalling 30 mA RCD. tripping of connection circuit breaker if 2 faults.
Portugal	TT	Ru < 50 Ω (100 Ω as from 1995).
USA 120/240	TN-C	earthing of neutral at LV consumers (all earth connections are connected to the source substation).

fig. 34:: Public distribution examples worldwide (LV consumers) – LV earthing systems.

The TN-C requires costly equipotentiality means:

- for the distributor:
- in the USA, installation of an additional conductor throughout MV and LV distribution with earthing every 400 m,
- in Great Britain, numerous earth connections are installed on the town public LV network neutral, if TN-C used, thus meaning consumers may not need their own earth connections,
- in Germany an earth connection is always made for the neutral just upstream from the consumer's connection point,
- in Greece, several connections of the neutral to the earth are installed along the LV network, as well as at every consumer supply point
- for the consumer:
- as a rule, connection to the protection conductor of the metal structures of the building and all the metal ducts.

4.2.2 In industrial and tertiary LV distribution

The 3 earthing systems are used to various degrees in all countries:

- the TN-C system is particularly used in Anglo-Saxon countries for carefully designed and produced installations (SCPD/loop impedance matching) corresponding to modern blocks of flats where all metal parts are connected to the protective conductor and where explosion and fire risks are extremely low. It is not currently recommended in premises equipped with communicating electronic systems (computer TBM, TPM and CTM -

Centralised Technical Management- networks) as currents in the neutral and thus in the PE cause potential references to vary. Do not forget that the TN-C can no longer be used when cross-section of live conductors is < 10 mm2 Cu.

- the TN-S system is also used in Anglo-Saxon countries and requires an additional conductor and careful design and production. However its use is more flexible and RCDs are used for personnel protection (for very long cables), for fire protection and for extensions without loop impedance calculation.

Nonetheless, the insulation fault currents which are short-circuit currents, may, if the PE is connected, in distribution, to metal structures, generate electromagnetic disturbances preventing electronic equipment from working properly (sum of currents in cable not zero and «stray» currents). Finally, as the neutral is not protected in some countries (measure authorised by standard IEC 364), it may be damaged by overcurrents, in particular when loads generating rank 3 harmonic currents and multiples are supplied by the network. In some cases this results in neutral cross-section being doubled (seen in the USA). In the long term, international standards should specify systematic protection of the neutral and indeed protection (without breaking) of the PEN in TN-C.

- the IT system requires as much care as the TN-S one. Permanent insulation monitoring allows fault prediction, currently simplified by digital systems that monitor insulation evolution for each feeder.

This system calls for fault tracking and elimination; thus electrical engineers should preferably be present on site. In many countries, the unearthed neutral is used whenever continuity of service is essential or when human life is at stake (e.g. hospitals), however, in UK, TN-S is used in hospitals.

- the TT system is the easiest one to implement; insulation fault currents are 1,000 times smaller than in TN or IT (2nd fault), thus accounting for its value as regards risk of fire, explosion, material damage and electromagnetic disturbances. Its weak point is the risk of disruptive breakdown by return on an insulation fault in the substation on the MV side if the zero sequence fault current is high and if the substation and neutral frames are connected. There are no statistics on use of earthing systems worldwide, but the TT system is by far the most commonly used. Moreover, its simplicity makes it without doubt the system best suited to developing countries.

4.3 Earthing systems of private LV networks in some countries

In the USA

All the various earthing systems are used: the TN-S (see fig. 35) is the most common, but the IT and impedance-earthed IT are used in process factories.

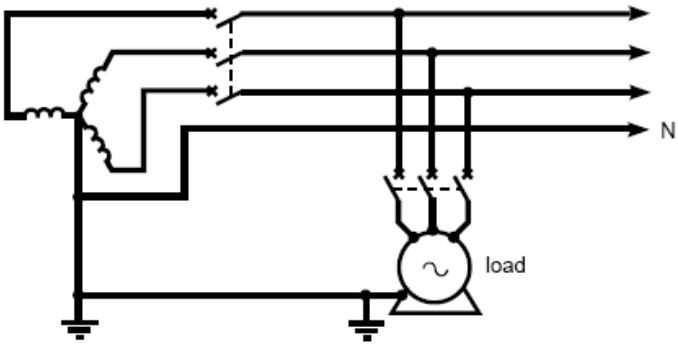

fig. 35: TN-S earthing system in the USA.

- implementation of the TN-S has two major special features:
  - the neutral is not protected and not switched, which may present risks for persons and property:
    - potential of the neutral compared with the earth may be high on a fault originating at MV level; this

presents a risk

- triplen harmonic currents add up in the neutral and may cause unacceptable temperature rise

- the protective conductor is often made up by the cable pathways and the metal tubes conveying the live conductors:

  - the impedance of this PE is hard to control. Thus NEC paragraph 230-95 (National Electrical Code) considers that SCPDs do not always guarantee safety in the event of an insulation fault,

  - as the PE is not mechanically connected to the faulty live conductor (cables on cable path acting as a PE), the electrodynamic forces due to the high fault current separate the cable from its support (American LV networks have very high prospective fault currents). This causes a transient fault with, as a result, a risk of non-operation of the SCPDs and an increase in fire risk.

Note that when the PE is a distributed conductor, earthing of the transformer neutral is sometimes performed through a low impedance, in order to limit the I^2t at the fault point (Id ≤1,000 A).

- protection devices used in TN-S

In addition to the use of SCPDs, remember that to the American way of thinking the main purpose of the «earth» protection devices used is protection of property and limitation of the fire risk. In this field, the NEC imposes minimum requirements, i.e. use of residual current protection devices on LV installations when the following 3 conditions are met:

- neutral directly earthed,
- phase-to-neutral voltage greater than 150 V and less than 600 V,
- nominal current strength of the device at the supply end greater than 1,000 V

- implementing the RCDs

This protection can be performed in three ways:

- «Residual Sensing» (detection of residual current by vectorial addition of currents in live conductors), (see fig.14). This assembly, known as Nicholson's, requires the installation of a current transformer on the neutral; in the USA the neutral is neither switched nor protected.
- «Source Earth Return» (residual current device placed in the neutral-earth

link) and usable only at the supply end of the installation. It allows parallel-connection of sources (see fig. 37),

- «Zero sequence» (classical RCD). For low current detection, it can be used at various levels of the installation to form discriminating protection (see fig. 38),
- incoming device settings:
  - max threshold: 1,200 A,
  - tripping time: must not exceed 1 s for a fault current of 3,000 A.

Note: The NEC does not specify a tripping time at 1,200 A, but it is common practice to install protection devices with lower thresholds and as instantaneous as possible.

- discrimination of residual current devices.

The NEC 230 paragraph 95 only stipulates earth protection for the incoming device. Naturally, this protection must also be installed downstream to prevent the entire installation being put out of operation in the event of one earth fault. Discrimination has then also to be achieved between the various protection devices. This problem can be solved in two ways:

- between the earth protection devices with discrimination of the:
  - time type by a time delay of 0 s to 1 s,
  - logic type or «Zone Selective Interlocking»; recommended in the USA, it prevents long time delays (reduction of the passing I^2t) and easily achieves discrimination on 3 levels or more,

- between the earth and thermal-magnetic protection

Discrimination will be determined by comparing the setting threshold of the upstream earth protection with the curve I = f(t) of the thermal-magnetic setting of the downstream protection device (see fig. 39).

Use of fewer «earth» protection devices in sub-distribution switchboards leads to higher settings of protection devices, resulting in increased risk of damage.

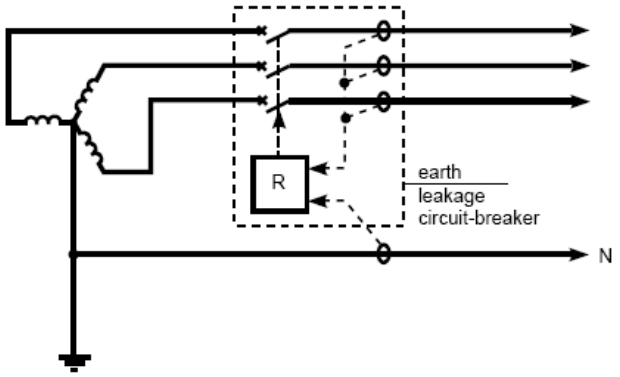

fig. 36: residual sensing.

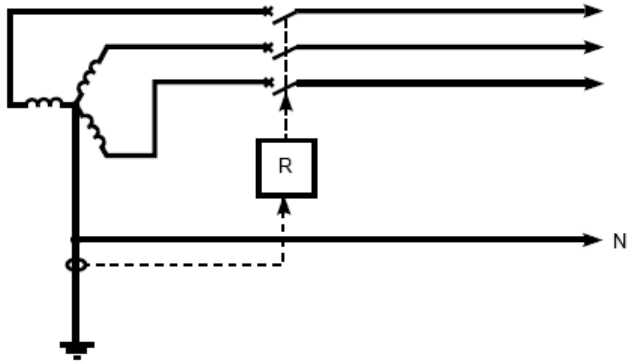

fig. 37: source earth return.

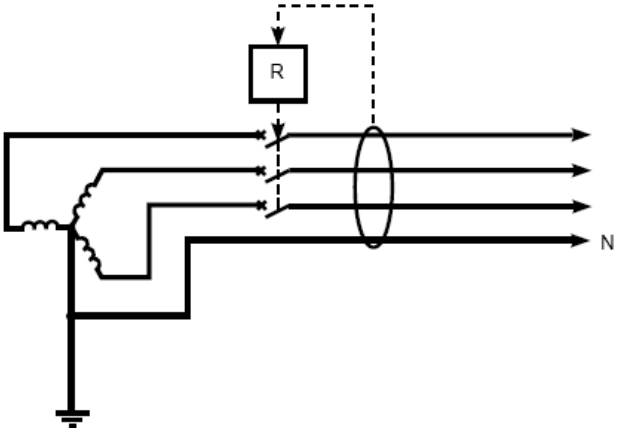

fig. 38: zero sequence

.

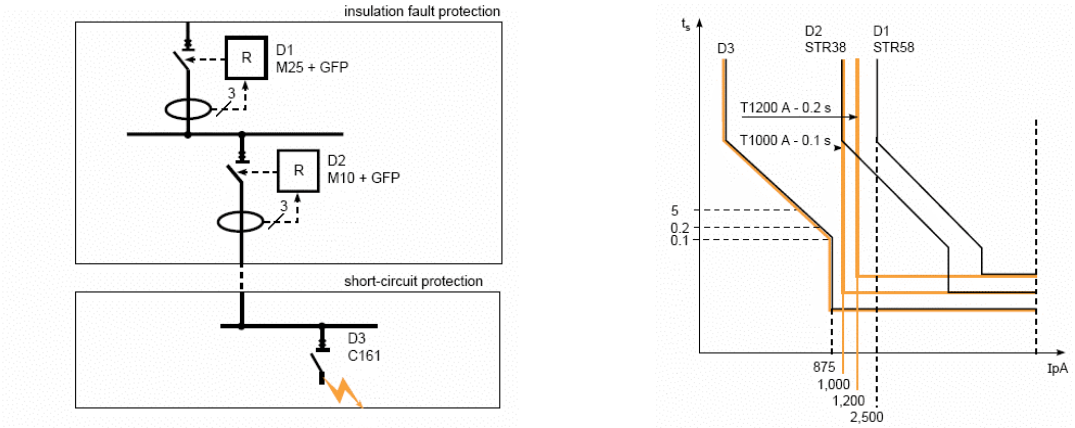

fig. 39: discrimination between downstream short-circuit protection (D3) and upstream earth protection (GFP) (orange).

4.4 Used Standards and Practices in Greece

4.4.1 General

Two earthing practices are applied in the public LV distribution network: a) TN-C, referred also in the following as “neutral-earthing”, and, b) TT, referred also as “direct earthing” (). The choice of protection method is responsibility of the distributor of electrical energy. Direct earthing may practically be installed only when there is an extended water-pipe system in the area and is restricted to the old networks of urban areas (in certain cases also to rural networks with very long lines). In the last years, due to the use of non-metallic water pipes and the interruption of the electrical continuity of metallic pipes by non-metallic connectors, the application of the TT system is not favoured.For private LV electrical installations, the TN-S system is applied, except for special applications (e.g. surgery rooms in hospitals), where the IT system is applied.

4.4.2 Requirements for application of neutral earthing (TN system)

To apply the TN system in the public LV network, the set of the following conditions has to checked and satisfied:

Earthing grid is the set of connected conductive parts (wires, strips, plates, bars, pipes) placed into the earth, in such a way that an “effective earthing” is ensured.

According to the Indoors Electrical Installation Code, the requirements to be met for application of neutral earthing are:

1st Condition: In the case of a phase-to-neutral fault (with no connection to earth) at any place in the low voltage network, the fault current must exceed three times the nominal current of the fuse protecting the circuit

2nd Condition: The neutral conductor must have the mechanical strength and electrical conductivity equal to those of the phase conductors. Exceptions are allowed for distribution cables.

3rd Condition: The neutral conductor must be earthed:

a. At the MV/LV substation

b. At the overhead networks terminations and at maximum every 300mWhen there is a need for extra earthing arrangements to reduce the earthing resistance of the neutral, these must be uniformly distributed along the network.

c. At the end of each overhead or underearth supply to the side of the consumer

4th Condition: Total earthing resistance of the neutral conductor (plus the earths at the feeding points) must be less or equal to 10 ohms. If the total earthing resistance of the neutral is lower than 1 ohm a single earthing system is used in the MV/LV substation, to which the LV neutral and the MV metallic parts are connected. Especially for overhead MV/LV substations on wooden poles, this limit is equal to 2 omhs (flashover from the MV elements to the metallic objects at a point before the protection means of the substation can be excluded). Notably, low earthing resistance values are obtained when a network of LV or MV underearth cable with metallic sheaths or earth wiresexists This is because the cable sheaths/earth conductors act as long earthing electrodes.

The metallic sheath of the underearth low voltage cables must be connected to the neutral in the MV/LV substation, at the consumer’s side, at the ends of the feeders and at both ends of underearth cable sections within an overhead network.

5th Condition: The neutral conductor must not be interrupted from fuses or switches (automatic or not). In general, special attention must be paid to ensure the continuity of the neutral and suitable measures for each case must be taken for this purpose.

In the networks where direct earthing (TT) was applied and gradually change to neutral earthing (TN), the Code excludes the coexistence of the two ways of earthing, unless the total earthing resistance of the neutral is less or equal to 1 Ω. The coexistence is maintained only for the time period required for the conversion of the old earthing and protection method.

To apply the TN system at a low voltage network, the minimum earthing electrodes stipulated in condition 3 should be installed. If the total earthing resistance is higher than 1 Ω (or 2 Ω), electrodes are added (up to one for every pole of the overhead network) to lower the total earthing resistance. Neutral earthing is not applicable when a value lower than 10 Ω cannot be achieved.

At neighboring distribution networks (having one or more common end poles), the neutral can be bridged only if neutral earthing is applied to all networks, or to no network at all.

4.4.3 Earthing of the "metallic parts" at the LV networks

Regardless of the protection method applied to a LV network, the following always hold

A. For overhead MV lines earthing systems are installed at poles where measuring devices or other switchgear are present (various types of switches, lightning rods, capacitor banks, etc). Every such earthing system should have a earthing resistance less or equal to 40 Ω so that operation of the protection devices is ensured when a flashover or insulation failure occurs and ensure equipotentiality for personnel safety purposes (hence, earthing mats are used). When the poles are made of reinforced concrete, a earthing conductor connecting several adjacent poles may also be present to lower sufficiently the overall earthing resistance.
B. The coexistence of MV and LV lines on common poles is only allowed if the overall earthing resistance of the neutral of the LV network is less or equal to 1 Ω or 2Ω. In such cases, a earthing conductor is not placed and earthing of poles and the "metallics" is achieved by connecting them to the neutral conductor.
C. Earthing of the "Metallics" and the neutral conductor in LV and MV networks
   The practice can be summarized as follows:
   1. When the overall earthing resistance of the neutral is less or equal to 1Ω (or 2 Ω for MV/LV substations on wooden poles), a common earthing is used for the "metallic" parts and the neutral conductor.
   2. If the neutral earthing resistance is between 1Ω and 10Ω (or 2Ω and 10Ω), two separate earthing systems are constructed, not connected to each other. The earthing system of the "metallic" parts must have a earthing resistance less than 40 Ω. To ensure that the earthing systems are "independent", the neutral earthing is constructed at a distance of 30-50 m from the substation.
   3. If the overall earthing resistance of the neutral is greater than 10 Ω, the TN system is not applied, but the MV and LV earthing systems are still constructed as described before.

5. Selection of the suitable Earthing System

5.1 Earthing systems and disturbances in electronic systems

Electromagnetic disturbances assume many different forms, namely:

- continuous or occasional;
- high or low frequency;
- conducted or radiated;
- common or differential mode;
- internal or external to the LV network.

Choice of earthing system is not a neutral one as regards:

- sensitivity to disturbances;
- generation of disturbances;
- effects on low current systems.

This section will review the most important aspects, without describing earthing system behaviour faced with MV (50 Hz) faults.

Faced with harmonics

The TN-C should be avoided since triplen harmonics flow in the PEN (added to neutral current) and prevent the latter from being used as a potential reference for communicating electronic systems . Moreover, if the PEN is connected to metal structures, both these and the electric cables become sources of electromagnetic disturbance.

Note

The TN-C-S (TN-S downstream from a TN-C should also be avoided even though risks are smaller).

Faced with fault currents

- short-circuits: avoid separating the live conductors; otherwise the Isc creates an electromagnetic pulse in the resulting loop;
- electrical earthing fault: the PE must follow the live conductors as closely as possible, or, better still, be in the same multi-conductor cable. Otherwise, as above, the transmitting loop effect appears. The higher the fault current, the greater this effect. The TT earthing system will thus be preferred, as the TN and IT (2nd fault) can develop currents 1,000 times greater.

In TN and IT, do not connect the PE to the metal frames of the building as the return currents may take a variety of paths and turn into transmitting antennae. The same also applies to the power cable, incorporating the PE, in which the sum of currents is no longer zero. With respect to equipotentiality of frames, the TN and IT (on the 2nd fault) are equivalent since frame potential at the fault point suddenly rises to » Uo/2 whereas it remains at 0 V at the origin of the installation. This leads to certain specialists specifying in TN and IT the creation of a low current frame circuit separated from the earth circuit (PE), both being connected to the earth connection at the origin of the LV installation. The TT with distributed PE throughout the installation is the best system in this respect (small Id and same potential reference for all the communicating devices), (see fig. 19).

Faced with lightning and operating overvoltages

These overvoltages, of common or differential mode and with a frequency of 1 kHz to 1 MHz can damage certain electronic devices if they are not fitted with an isolating transformer with a small primary/secondary capacitive coupling. As regards differential mode overvoltages, all the earthing systems are equivalent. The solution consists in:

- implementing surge reducing at disturbance source level (e.g. RC on contactor coils);

- protecting sensitive equipment by installing a surge limiter (varistor, ZnO lightning arrester) directly at their terminals.

As regards common mode overvoltages (lightning), ZnO lightning arresters should be installed at the origin of the LV installation with the shortest possible earth connections. In this case, although the TN and TT earthing systems may seem more suitable than IT but overvoltages are transmitted on LV phases. In actual fact, at the frequencies considered, the phase/neutral impedance of the LV windings is very high (the phases are as though they were «unearthed» even if the neutral is earthed).

Faced with HF disturbances:

All the earthing systems are equivalent. Advice for minimising the effects of HF disturbances:

- use the Faraday cage effect for buildings (metal structures and meshed floors), or for certain rooms in the building reserved for sensitive equipment,
- separate the frame network (structural and functional frames) from the earth network (PE),
- avoid loops which may be formed by the high and low current circuits of communicating devices or place low current links (frame surfaces - ducts/metal screens -accompanying frames) under a «reduction effect»,
- avoid running them too close to power cables and make them cross at 90□;
- use twisted cables, or, even better, shielded twisted cables. There are still not many standards in this area and they are often prepared (EMC standards) by electronic engineers. Installation standard IEC 364, sections 444 and 548, should provide increasingly more recommendations.

5.2 Choosing the earthing systems

Choice may be determined by normal practice in the country. Choice of earthing system should be influenced by electrical power users and network operators (electrical service). Experience shows however that the choice is mainly made by the engineering firms designing the installation.

5.2.1 For users and operators

These both demand absolute DEPENDABILITY; electrical power should thus always be available and be completely risk-free, i.e. «out of sight, out of mind». The elements making up installation dependability:

- safety;
- availability;
- reliability;
- maintainability must therefore be optimised.

In addition, a new requirement, electricity must not disturb the numerous low current devices. These are the criteria used to make the best choice according to:

- type of building;
- the activity it houses;
- whether or not an electrical service is available.

In safety terms, the TT is the best,

In availability terms, the IT is the most suitable,

In maintainability terms, fault tracking is fast in TN (thanks to the SCPD) but repair time is often long. Conversely, in IT, tracking of the first fault may be more difficult, but repairs are quicker and less costly. The TT is a good compromise.

In reliability terms, the protection devices used are reliable, but reliability of the installation and loads may be affected:

- in TN-C by the fact that the PEN, not protected, may be damaged by harmonic currents;
- in TN-C and TN-S;
    - by insufficient rigour for extensions,
    - by use of replacement sources with low short-circuit power,
    - by the effects of electrodynamic forces;
- in IT, on a double fault, the risks inherent in TN described above also exist. However if tracking and elimination of the 1st fault are rapid, installation reliability is excellent.
- in TT, by disruptive breakdown by return of the loads due to a fault in the HV/LV transformers. However the likelihood of this fault occurring is small and preventive solutions are available, e.g. use of surge arresters between one of the live conductors and the load earth connection.

In disturbance terms, the TT is to be preferred to the TN-S whose high fault currents may be the source of disturbance. The table in figure 40 reviews the strong and weak points of each earthing system:

5.2.2 For installation designers

Designing is simpler in TT, the same for extensions (no calculations). Designing complexity is equivalent in TN-S and IT. As regards costs:

- the TN-S is the least costly to install, for example if the neutral is neither protected nor switched, but the cost of curative maintenance can be high;
- the IT is slightly more costly to install (insulation monitoring and insulation fault tracking devices). Search for maximum availability of electrical power requires the presence of an electrical engineer, whose action will minimise curative maintenance;
- the TT, if enough discriminating RCDs are installed, is slightly more costly to install than the IT, but fault tracking is simple and curative maintenance less costly than in TN. In terms of complete cost over 10 to 20 years, all three earthing systems are equivalent.

The right choice

In a certain number of countries, for some buildings or parts of a building, the choice is laid down by legislations or standards, e.g. for hospitals, schools, navy, worksites, mines, etc. In other cases, certain earthing systems are strictly prohibited, for example the TN-C in premises with explosion risks. Apart from these compulsory choices, the DEPENDABILITY objectives (safety, availability, reliability, maintainability and proper operation of low current communicating systems) are those which should determine which earthing system is chosen for a specific building type. The degree of development of the country should also be taken into consideration, as should be national practices, climate. If we plot an axis from North to South, as regards public distribution, we find the IT earthing system in Norway, TN-C in Germany, TT in France and in most African countries. In temperate, industrialised countries, all three earthing systems are used in private installations. Finally, it should be noted that it is possible and even advisable to mix the earthing systems (see fig. 41).

	TN-C	TN-S	TT	IT(1)	IT(2)	Observations
safety						
■ of persons	+	+	+	++	-	Uc # 0 on 1st fault (IT)
■ fire	- -	-	+	++	-	TN-C not recommended
■ explosions	- -	-	+	++	-	TN-C strictly prohibited
availability- (further to 1 fault)	+	+	+	++	+	depends on discrimination of the SCPDs or RCDs (easier to implement)
maintenability	-	-	+	++	-	the IT authorises preventive and even predictive maintenance
reliability of the installation	-	+	++	++	+	advantage for small Ids (damage- electrodynamic forces)
disturbances						
■ radiation transmission EM	-	-	+	++	-	advantage for small Id
■ equipotentiality of PE	- -	+	++	+	+	pay attention to harmonics in TN-C

(1) : 1st insulation fault.
(2) : 2nd fault.

fig. 40: Comparison of the earthing systems.

a) "series" association of earthing systems

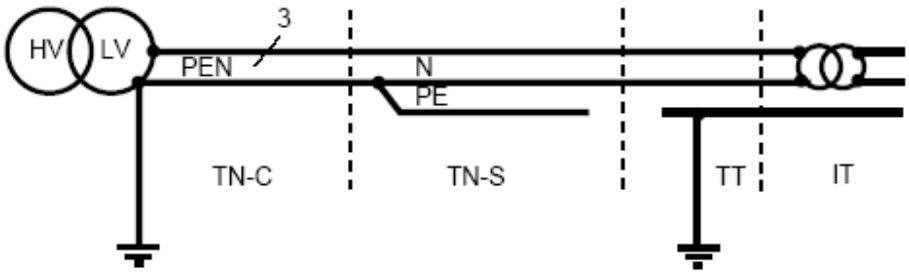

b) "parallel" association of earthing systems

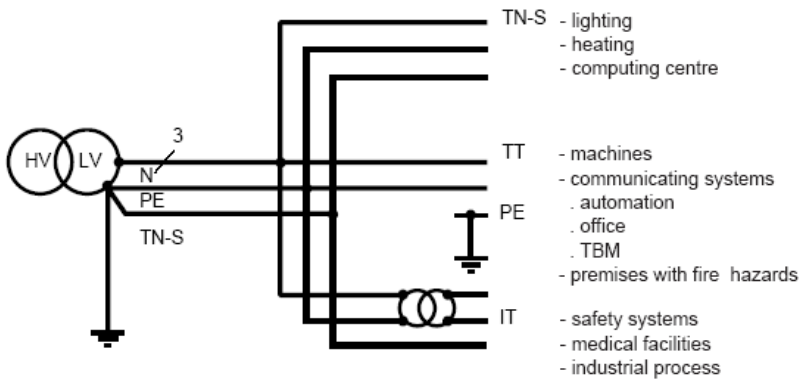

fig. 41: several earthing system included in the same LV installation.

6. Conclusions

The three earthing systems (TN - IT - TT) and their implementation are clearly defined in installation standards (IEC 364). Their respective use varies from country to country:

- mainly TN in Anglo-Saxon countries;
- TT often used in the other countries;
- IT used when safety of persons and property, and continuity of service are essential.

All three systems are considered to guarantee protection of persons. Two major changes have had a considerable effect on the choice of earthing systems:

- search for optimum continuity of service;
- proliferation of high current (disturbers) and low current (disturbed) electronic devices, which are increasingly set up in communicating systems..

Thus the general tendency for earthing systems, in both MV and LV, is to limit insulation fault currents. At present, the fault currents of traditional LV earthing systems have the following standard values:

- IT (1st fault): Id < 1 A;
- TT: Id ≈ 20 A;
- TN: Id ≈ 20 kA;
- IT (2nd fault): Id ≈ 20 kA.

Limiting fault currents:

- simplifies maintainability of the electrical installation, thus increasing availability;
- minimises the fire hazard;
- can reduce contact voltage;
- and, for sensitive systems, minimises disturbance due to electromagnetic radiation and common impedance.

Moreover, in view of the proliferation of communicating digital systems (computers, video, automation, TBM etc., it is vital that earthing systems provide a potential reference which is not disturbed by high fault currents and harmonics. Consequently, future evolution should favour earthing systems generating fault currents, which do not exceed a few dozen amps. TT earthing systems should therefore be increasingly used.

7. References

[1] E.D. Sunde, ‘Earth conduction effects in transmission systems’, 2nd ed., New York: Dover Publications, 1968

[2] IEC 241: Fuses for domestic and similar purposes.

[3] IEC 269: Low voltage fuses.

[4] IEC 364: Electrical installations of buildings.

[5] IEC 479: Effects of currents flowing through the human body.

[6] IEC 755: General requirements for residual current operated protective devices.

[7] IEC 947-2: Low voltage switchgear and control gear.

[8] NF C 15-100 : Installations électriques à basse tension.

[9] NF C 63-080 : Dispositifs de contrôle permanent d'isolement et dispositifs de localisation de défauts associés.

[10] IEC 1008: Residual current operated circuit-breakers without integral over current protection for household and similar uses (RCCB's)

[11] IEC 1009: Residual current operated circuit-breakers with integral over current protection for household and similar uses (RCBO's)

[12] NF C 15-100: Installations électriques à basse tension.
[13] NF C 63-150 : Limiteurs de surtension : règles. French decree of the 14.11.88
[14] Earthing of the neutral conductor in High-Voltage networks, Cahier Technique n° 62 F. SAUTRIAU
[15] Residual current devices, Cahier Technique n° 114 R. CALVAS
[16] Protections des personnes et alimentations statiques sans coupure, Cahier Technique n° 129, J.-N. FIORINA
[17] Les perturbations électriques en BT, Cahier Technique n° 141 R. CALVAS
[18] Introduction to dependability design, Cahier Technique n° 144 P. BONNEFOI
[19] Lightning and HV electrical installations, Cahier Technique n° 168 B. DE METZ NOBLAT
[20] Earthing systems in LV, Cahier Technique n° 172 B. LACROIX and R. CALVAS
[21] Perturbations des systèmes électroniques et schémas des liaisons à la terre, Cahier Technique n° 177, R. CALVAS
[22] Connaissance et emploi du SLT neutre isolé, Cahier Technique n° 178 E. TISON et I. HERITIER
[23] Guide de l'installation électrique (partie G).Ed. FRANCE IMPRESSION CONSEIL 1991.
[24] Guide de l'ingénierie électrique. Ed. ELECTRA 1986.
[25] Electrical Review. Nov. 1991 - Oct. 1992.
[26] La protection différentielle. Cahier Technique J3E - 02/90.
[27] Biegelmeier, G. "Gedanken über die Nullung (TN System) als optimalen Fehlerschutz (Schutzma nahme bei indirektem Berühren) in elektrischenAnlagen", Elektrizitätswirtschaft, Vol. 85 (1985), No. 2, p61-63.
[28] Voeten, M.J. "Aardingsvoorzieningen voor kleinverbruikers", Elektrotechniek, Vol 67 (1989), No 9, pp. 807-811
[29] Cobben, J.F.G. Aanbieding aardingsvoorziening aan kleinverbruikers, Elektrotechniek,Vol 69 (1991), No 6., p491-497.
[30] Parise, G. "A summary of the IEC Protection Against Electric Shock", IEEE Transactions on Industry applications, Vol 34, No 5, September/October 1998
[31] P.M. van Oirsouw, F. Provoost,"Safety: a very important factor in cost-optimal low-voltage distribution network design", 16 th International Conference on Electricity Disribution, (CIRED), 18-21 June 2001, paper 5.4
[32] EN 50310 "Application of Equipotential Bonding and Earthing in buildings with Information Technology Equipment,"June 1998, page 14
[33] G. Cantarella, V. Carrescia, R. Tommasini. "Quality of Residual Current-Operated Circuit Breakers", ETEP Vol 6, No.3. May/June 1996
[34] Fathers, D., "Use of PME earth Terminals on Overhead Distributors", Power Engineering Journal December 1994, pag 261-264.
[35] Private communication april 1999, C. Tudziers, Deutsche Telekom
[36] ETS 300253 "Ëquipment Engineering(EE); Earthing and Bonding of Telecommunication Equipment in Telecom Centres", January 1995
[37] Rauch, G.B., Johnson, G. Johnson, P., Stamm, A., Tomita, S., Swanson, J., "A Comparison of International Residential Earthing Practices and Associated Magnetic Fields", IEEE Transactions on Power Delivery, Vol. 7, No 2, April 1992
[38] ICNIRP Guidelines, 1998, "Guidelines for limiting exposure to time-varying electric, magnetic and electromagnetic fields (up to 300 GHz)", Health Physics, Vol 74, No.4, pp.494-522
[39] Kohling, A. ,Zimmer, G., "Beeinflussung von Bildschirmarbeitsplätzen durch Magnetfelder", Jahrbuch Elektrotechnik '95, Berlin u. Offenbach: VDE-Verlag, 1994, pag. 215-227 (in German)
[40] P.A.A.F Wouters, M.J.A.M. van Helvoort, P.C.T. van der Laan, 2000, "Mitigation of B-Fields, Backearth and practical Examples", 4 th European Symposium on Electromagnetic Compatibility Brugge, pp. 122-126

[41] G. Buse, 1959 “Der Bleimantel als Erder,” Elektrizitaetswirtsch., pp. 124-127.(in German)
[42] D. Halkin , J. Hoeffelman, 1997, “Criteria for determining the Efficiency of a Global Earthing”, Contribution to 14th International Conference on Electricity Distribution, Discussion Proceedings session 2, Question 5. pp 89, 90.
[43] “IEEE P1547/D07. Draft Standard for Interconnecting Distributed Resources with Electric Power System”
[44] “Application guide for Distributed Generation Interconnection. The NRECA guide to IEEE 1547”.
[45] “DG Power Quality, Protection and Reliability. Case studies report”, GE Research & Development Center.
[46] “To earth or not to earth: That is not the question (in the USA)”. John Wiles, Sponsored by the Photovoltaic Systems Assistance Center, Sandia National Laboratiories.
[47] Spanish Low Voltage Code